Copystar

CS 255
CS 305

PARTS LIST

Published in October 2010
2K3PL970
First Edition

CONVERSION LIST

1102K32US0 TASKalfa 305 120V60HZ
1102L32US0 TASKalfa 255 120V60HZ
1102L32US1 TASKalfa 255b 120V60HZ

1102K32CS0 CS 305 120V60HZ
1102L32CS0 CS 255 120V60HZ

First Edition		Part.No.	Alternative.	Description	Quantity
Fig. No.	Ref. No.				
1	1	302K394440	2K394440	PARTS COVER FRONT ASSY 30 A SP (30ppm)	1
1	1	302L394030	2L394030	PARTS COVER FRONT ASSY 25 A SP (25ppm)	1

Part.No.	Alternative.	Description	Quantity
302K394690	2K394690	PARTS COVER FRONT ASSY 30 CS SP (30ppm)	1
302L394040	2L394040	PARTS COVER FRONT ASSY 25 CS SP(25ppm)	1

CONTENTS

FIG. 1 Covers 2
FIG. 2 Frames 1 4
FIG. 3 Frames 2 6
FIG. 4 Paper Cassette 8
FIG. 5 Paper Feed Section 1 10
FIG. 6 Paper Feed Section 2 12
FIG. 7 Paper Conveying Section 14
FIG. 8 Scanner Section 16
FIG. 9 Laser Scanner Section 18
FIG. 10 Developing Section 20
FIG. 11 Image Formation Section 22
FIG. 12 Fuser Section 24
FIG. 13 Drive Section 26
FIG. 14 Operation Section 28
FIG. 15 Document Processor 1 30
FIG. 16 Document Processor 2 32
FIG. 17 Document Processor 3 34
FIG. 18 Original Cover 36
FIG. 19 Maintenance Kits 38

• INDEX 39

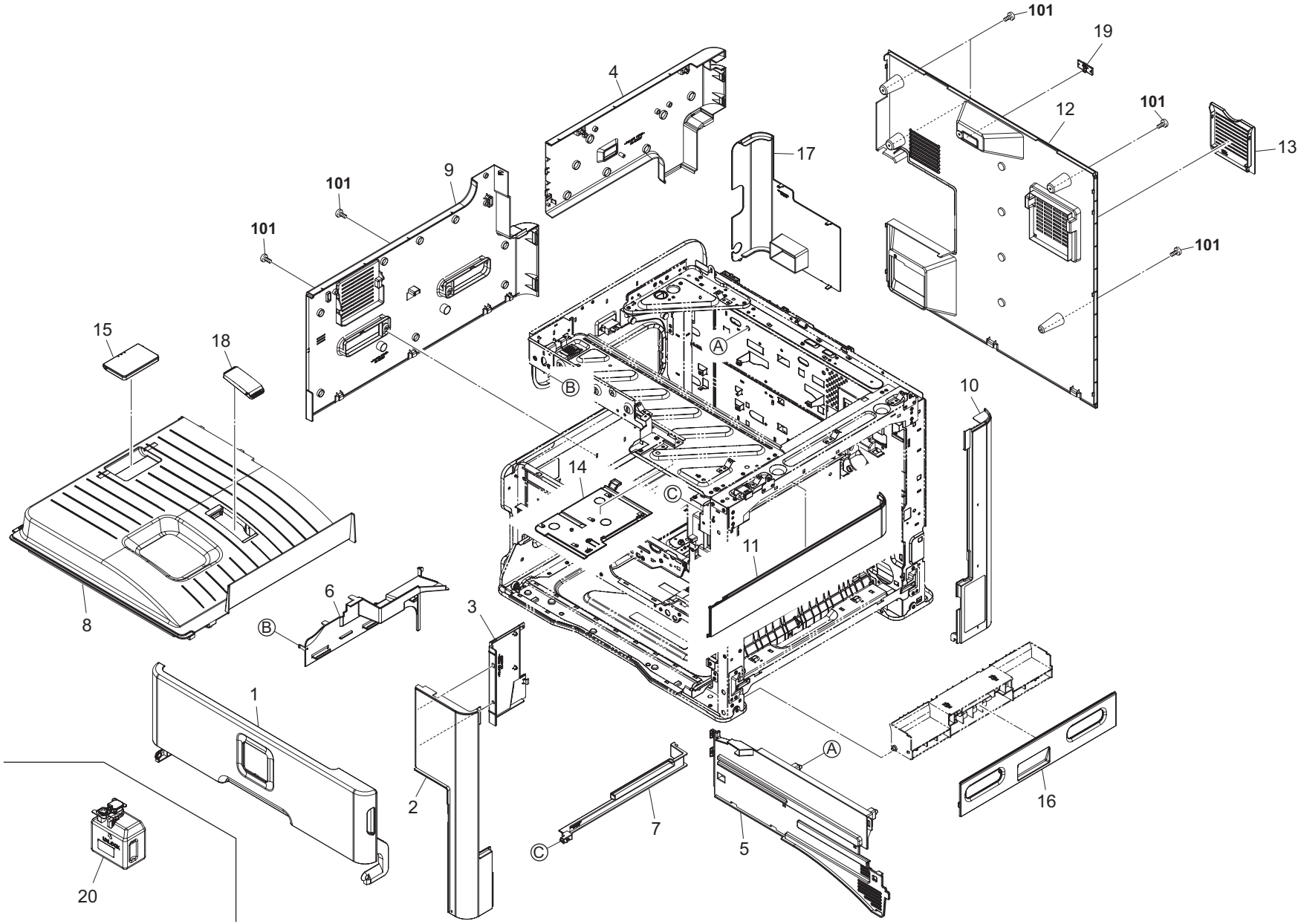
101
19
4
12
101
13
17
9
101
101
101
15
18
Ⓐ
Ⓑ
10
14
Ⓒ
11
8
6
Ⓑ
3
1
2
Ⓒ
7
Ⓐ
16
5
20

Ref. No.	Part.No.	Alternative Part.No.	Description	Quantity		
				120	230	240
1	302K394430	2K394430	PARTS COVER FRONT ASSY 30 J/E SP (30ppm)		1	1
1	302L394020	2L394020	PARTS COVER FRONT ASSY 25 J/E SP (25ppm)		1	1
1	302K394440	2K394440	PARTS COVER FRONT ASSY 30 A SP (30ppm)	1		
1	302L394030	2L394030	PARTS COVER FRONT ASSY 25 A SP (25ppm)	1		
2	302K304020	2K304020	COVER FRONT TOP	1	1	1
3	302K304050	2K304050	COVER EXIT FRONT	1	1	1
4	302K304110	2K304110	COVER LEFT TOP	1	1	1
5	302K304040	2K304040	COVER EXIT REAR	1	1	1
6	302K304180	2K304180	COVER TRAY LEFT	1	1	1
7	302K304190	2K304190	COVER EXIT TOP	1	1	1
8	302K304030	2K304030	COVER TRAY	1	1	1
9	302K304100	2K304100	COVER LEFT LOW	1	1	1
10	302K304060	2K304060	COVER RIGHT REAR	1	1	1
11	302K394580	2K394580	PARTS COVER RIGHT TOP ASSY SP	1	1	1
12	302K394610	2K394610	PARTS COVER REAR ASSY SP	1	1	1
13	302K304200	2K304200	COVER FILTER REAR	1	1	1
14	302K304290	2K304290	COVER EXIT FRONT TOP	1	1	1
15	302H004560	2H004560	STOPPER PAPER	1	1	1
16	302K304070	2K304070	COVER RIGHT LOW	1	1	1
17	302K304170	2K304170	LID CONTROLLER BOX	1	1	1
18	302K304370	2K304370	STOPPER PAPER B	1	1	1
19	302L302010	2L302010	LID D SUB (Original cover Standard model)	1	1	1
20	302K393130	2K393130	WT-475	1	1	1
101	7BB702308H	BB107060	+TP-FLAT T.T S SCREW 3X8 SR			

Parts with " • " are component parts or sub-assemblies of the assembly appearing immediately above them.

Parts with " • • " are component parts or sub-assembly with " • " appearing immediately above them.

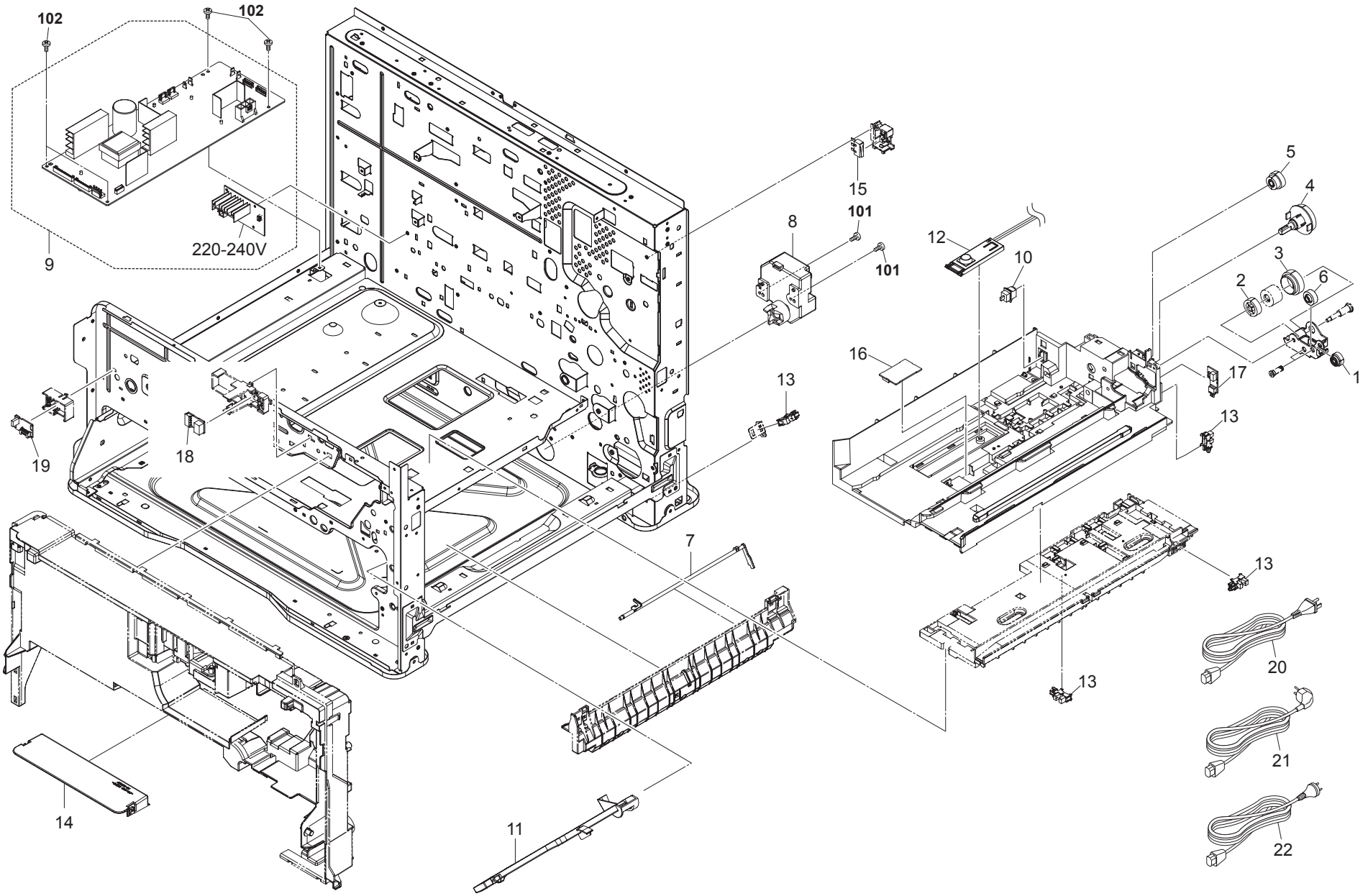
102
102
9
220-240V
15
8
101
101
12
10
5
4
3
2
6
1
16
17
13
13
19
18
13
7
13
20
14
11
21
22

Ref. No.	Part.No.	Alternative Part.No.	Description	Quantity		
				120	230	240
1	302K394260	2K394260	PARTS GEAR CONTAINER Z18L SP	1	1	1
2	302K394270	2K394270	PARTS GEAR CONTAINER Z25L SP	1	1	1
3	302K394280	2K394280	PARTS GEAR CONTAINER Z35R SP	1	1	1
4	302K394290	2K394290	PARTS GEAR CONTAINER Z24L-Z19R SP	1	1	1
5	302K394300	2K394300	PARTS GEAR CONTAINER Z41L SP	1	1	1
6	302K394390	2K394390	PARTS GEAR CONTAINER Z20R SP	1	1	1
7	302K302830	2K302830	ACTUATOR DECK FEED	1	1	1
8	302K394190	2K394190	PARTS MOTOR LIFT ASSY SP	1	1	1
9	302K394110	2K394110	PARTS LVU MAIN 120 SP	1		
9	302K394120	2K394120	PARTS LVU MAIN 200 SP		1	1
10	7SP01000001+H01	SP044290	SW.PUSH	1	1	1
11	302K302810	2K302810	ACTUATOR PAPER EMPTY	1	1	1
12	302KK94070	2KK94070	PARTS CONT SENSOR ASSY SP	1	1	1
13	7NXGP1S173LCH01	NX116910	SENSOR OPT.	4	4	4
14	302K304080	2K304080	COVER INNER LOW	1	1	1
15	7SM010202+++H01	SM044270	SW.MICRO	1	1	1
16	302K394070	2K394070	PARTS PWB RFID ASSY SP	1	1	1
17	302K394090	2K394090	PARTS PWB DEVE CONNECT ASSY SP	1	1	1
18	302K394080	2K394080	PARTS PWB DRUM CONNECT ASSY SP	1	1	1
19	302K394100	2K394100	PARTS PWB HUMIDITY SENSOR ASSY SP	1	1	1
20	3019527401	19527401	POWER CORD(120)	1		
21	2AR27800	2AR27800	POWER CORD(230)		1	
22	7AAACCAS+10H001	AA063380	AC CORD ASSY AS			1
101	7BB700312H	BB106820	+BIND T.T S SCREW 3X12 SR			
102	7BB700308H	BB105600	+BIND T.T S SCREW 3X8 SR			

Parts with " • " are component parts or sub-assemblies of the assembly appearing immediately above them.

Parts with " • • " are component parts or sub-assembly with " • " appearing immediately above them.

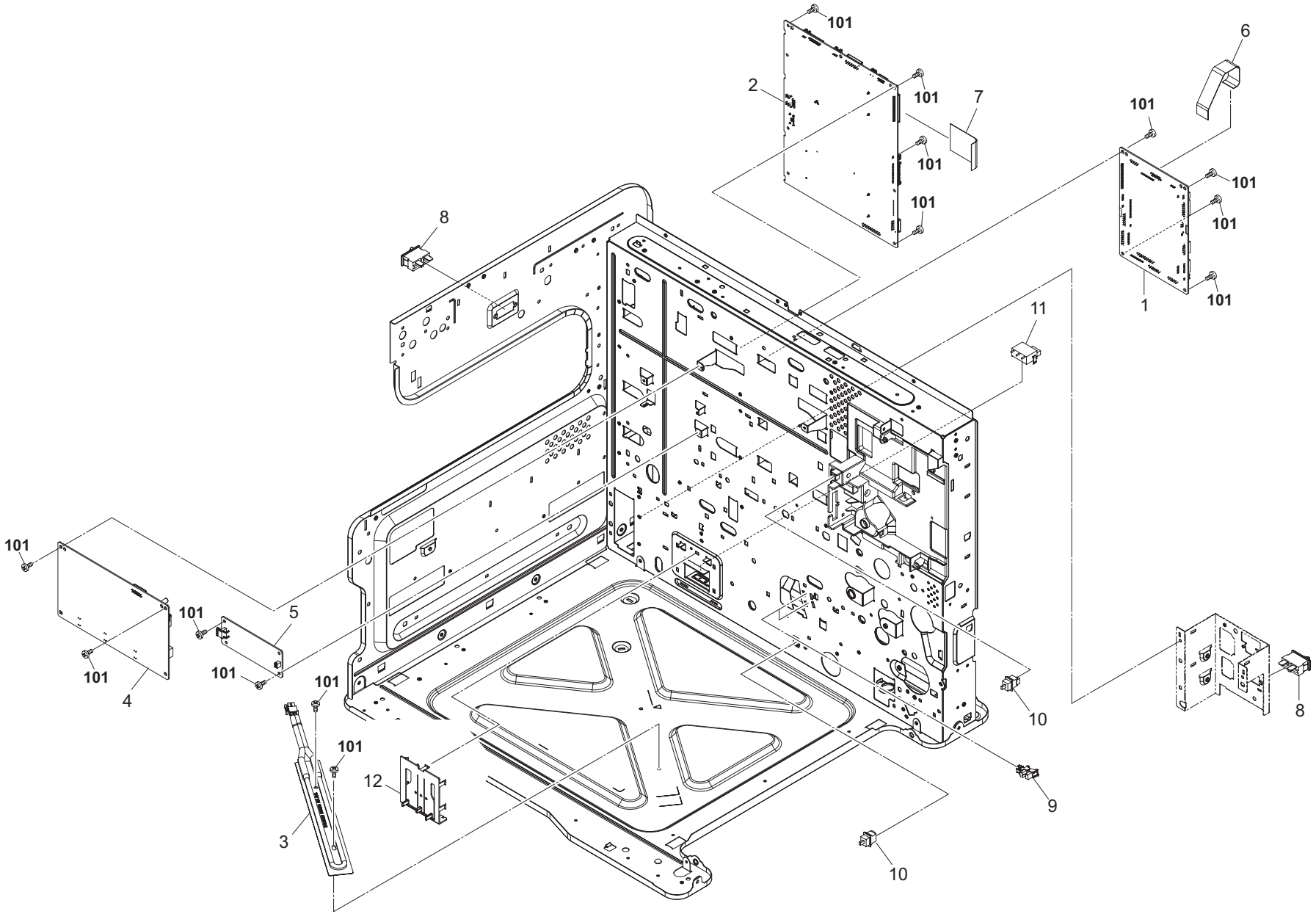
101
2
101
7
101
101
6
101
101
101
1
101
8
11
101
101
5
101
101
4
101
101
12
3
10
9
10
8

Ref. No.	Part.No.	Alternative Part.No.	Description	Quantity		
				120	230	240
1	302K394040	2K394040	PARTS PWB ENGINE ASSY SP	1	1	1
2	302K394010	2K394010	PARTS PWB MAIN ASSY SP	1		1
2	302K394020	2K394020	PARTS PWB MAIN ASSY SP EU		1	
3	302K302430	2K302430	HEATER DEHUMIDIFIER 120	1		
3	302K302440	2K302440	HEATER DEHUMIDIFIER 240		1	1
4	302K394140	2K394140	PARTS HVU SP	1	1	1
5	302K394150	2K394150	PARTS LVU SUB 100 SP	1		
5	302K394160	2K394160	PARTS LVU SUB 200 SP		1	1
6	302K346370	2K346370	FFC ENGINE-HVU	1	1	1
7	302K346380	2K346380	FFC ENGINE-MAIN	1	1	1
8	7SC010105+++H01	SC125000	SW.SEESAW	2	2	2
9	7NXGP1S173LCH01	NX116910	SENSOR OPT.	2	2	2
10	7SP01000001+H01	SP044290	SW.PUSH	2	2	2
11	5ESP03090001+01	SP000360	PUSH SWITCH 03 SN /SW-192 N	1	1	1
12	302K309410	2K309410	PLATE SIZE DETECTION	1	1	1
101	7BB700308H	BB105600	+BIND T.T S SCREW 3X8 SR			

Parts with " • " are component parts or sub-assemblies of the assembly appearing immediately above them.

Parts with " • • " are component parts or sub-assembly with " • " appearing immediately above them.

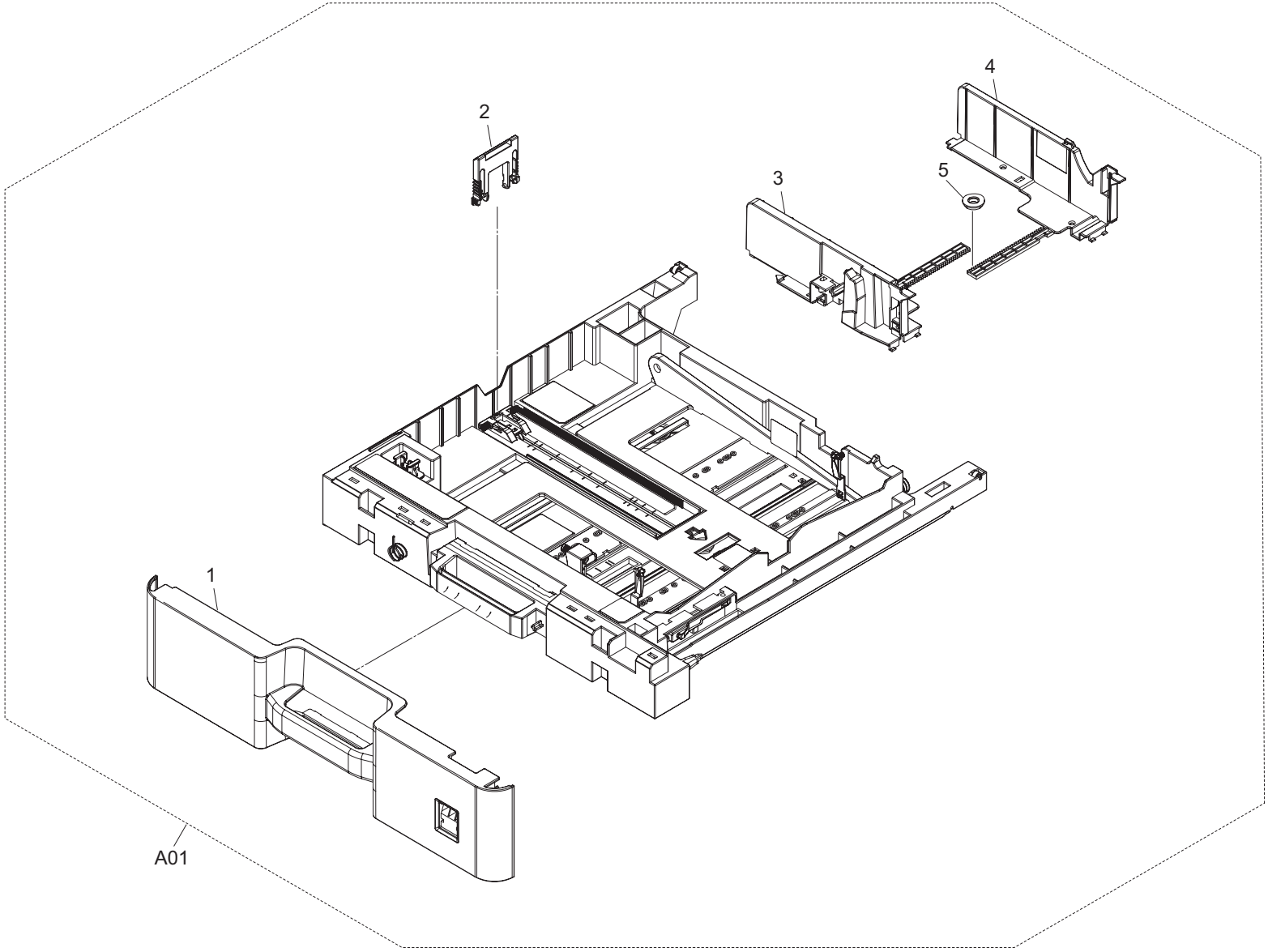
2
4
3
5
1
A01

FIG. 4 Paper Cassette

Ref. No.	Part.No.	Alternative Part.No.	Description	Quantity		
				120	230	240
A01	302K393170	2K393170	CT-475	1	1	1
1	•302K309080	2K309080	COVER CASSETTE	1	1	1
2	•302K309270	2K309270	CURSOR END	1	1	1
3	•302K309130	2K309130	CURSOR CASSETTE FRONT	1	1	1
4	•302K309120	2K309120	CURSOR CASSETTE REAR	1	1	1
5	•302K394380	2K394380	PARTS GEAR Z18 SP	1	1	1

Parts with " • " are component parts or sub-assemblies of the assembly appearing immediately above them.

Parts with " • • " are component parts or sub-assembly with " • " appearing immediately above them.

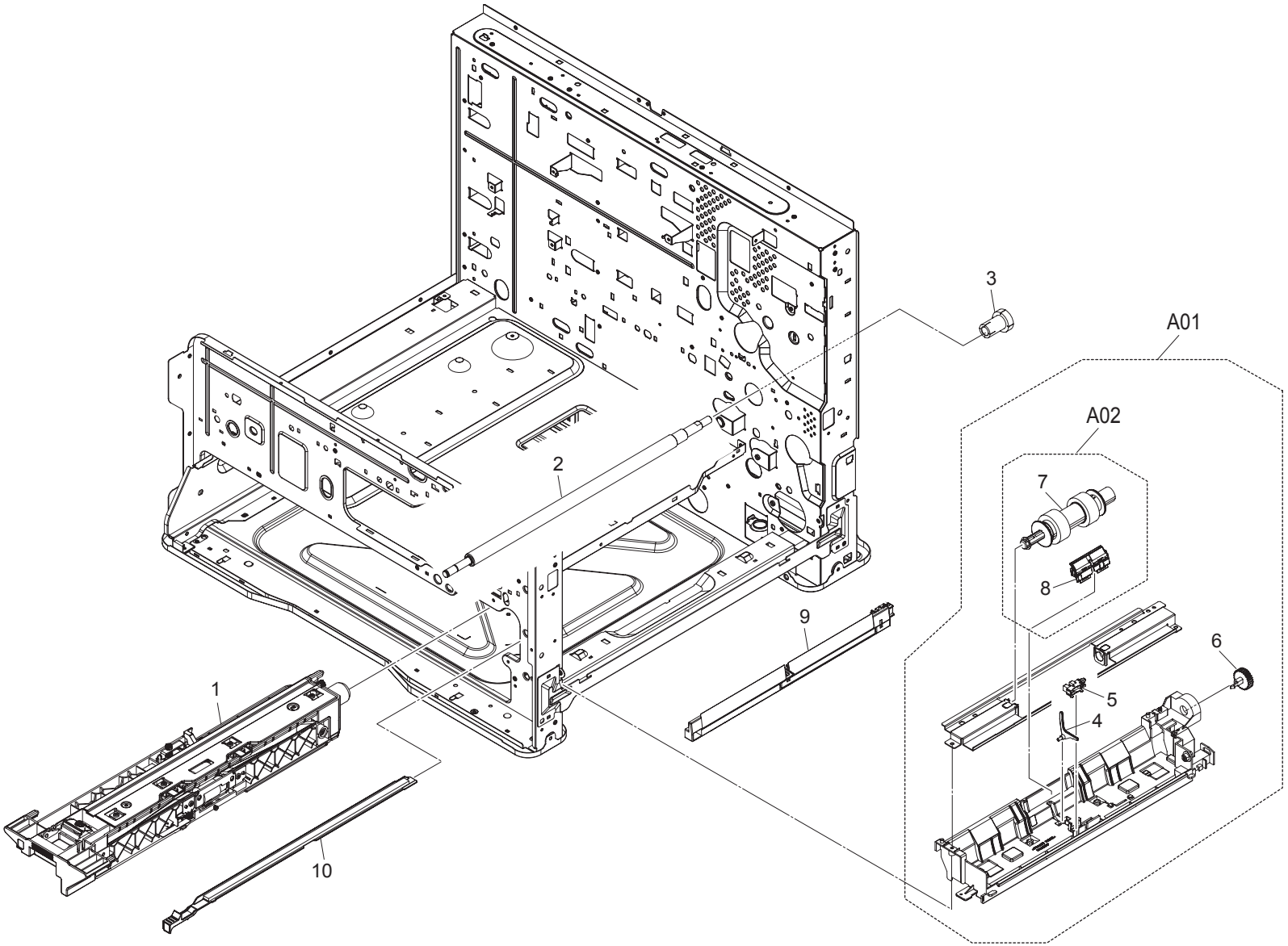
3
A01
A02
2
7
8
9
6
5
4
1
10

FIG. 5 Paper Feed Section 1

Ref. No.	Part.No.	Alternative Part.No.	Description	Quantity		
				120	230	240
1	302K394480	2K394480	PRIMARY FEED UNIT	1	1	1
2	302K394230	2K394230	PARTS ROLLER REGIST LEFT SP	1	1	1
3	302K394310	2K394310	PARTS GEAR REGIST Z28L-Z18L SP	1	1	1
A01	302K394500	2K394500	PARTS MPF UNIT	1	1	1
4	•302K308020	2K308020	ACTUATOR MPF	1	1	1
5	•7NXGP1S173LCH01	NX116910	SENSOR OPT.	1	1	1
6	•302K394320	2K394320	PARTS GEAR MPF Z28 SP	1	1	1
A02	•302K394620	2K394620	MPF ROLLER-PAD SET (for customer)	1	1	1
7	••302K394460	2K394460	MPF ROLLER (service only)	1	1	1
8	••302K394490	2K394490	SEPARATION PAD (service only)	1	1	1
9	302K394540	2K394540	PARTS FEED UNIT ASSY SP	1	1	1
10	302K394450	2K394450	REGIST CLEANER	1	1	1

Parts with " • " are component parts or sub-assemblies of the assembly appearing immediately above them.

Parts with " • • " are component parts or sub-assembly with " • " appearing immediately above them.

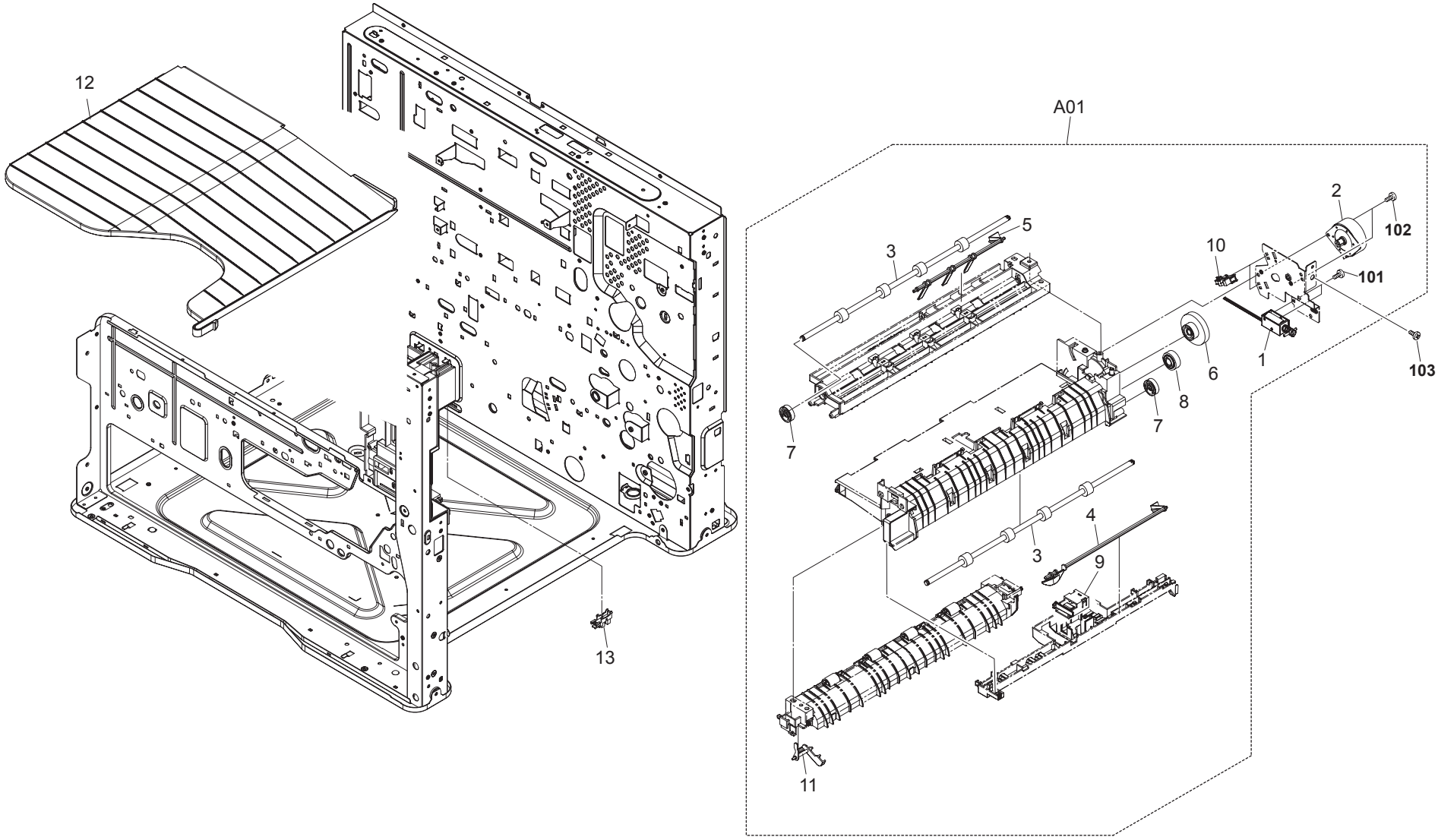
12
13
A01
2
102
101
103
10
1
5
3
6
8
7
7
4
3
9
11

FIG. 6 Paper Feed Section 2

Ref. No.	Part.No.	Alternative Part.No.	Description	Quantity		
				120	230	240
A01	302K394520	2K394520	PARTS EXIT UNIT	1	1	1
1	•302F944090	2F944090	SOLENOID ASSY	1	1	1
2	•302HN44100	2HN44100	MOTOR REVERSE	1	1	1
3	•302K394240	2K394240	PARTS ROLLER EXIT SP	2	2	2
4	•302K328060	2K328060	ACTUATOR EXIT OVERFLOW	1	1	1
5	•302K328070	2K328070	ACTUATOR EXIT UPPER SWITCH	1	1	1
6	•302K394340	2K394340	PARTS GEAR Z74R-Z22S EXIT SP	1	1	1
7	•302K394350	2K394350	PARTS GEAR Z22S EXIT SP	2	2	2
8	•302K394360	2K394360	PARTS GEAR Z25S EXIT INPUT SP	1	1	1
9	•302K394180	2K394180	PARTS SWITCH EXIT PAPER EMPTY SP	1	1	1
10	•7NXGP1S173LCH01	NX116910	SENSOR OPT.	2	2	2
11	•302K328160	2K328160	ARM ACTUATOR EXIT	1	1	1
12	302K328300	2K328300	TRAY EJECT	1	1	1
13	7NXGP1S173LCH01	NX116910	SENSOR OPT.	1	1	1
101	7BB000303H	BB107000	+BIND M SCREW 3X3			
102	7BB700308H	BB105600	+BIND T.T S SCREW 3X8 SR			
103	7BB702308H	BB107060	+TP-FLAT T.T S SCREW 3X8 SR			

Parts with " • " are component parts or sub-assemblies of the assembly appearing immediately above them.

Parts with " • • " are component parts or sub-assembly with " • " appearing immediately above them.

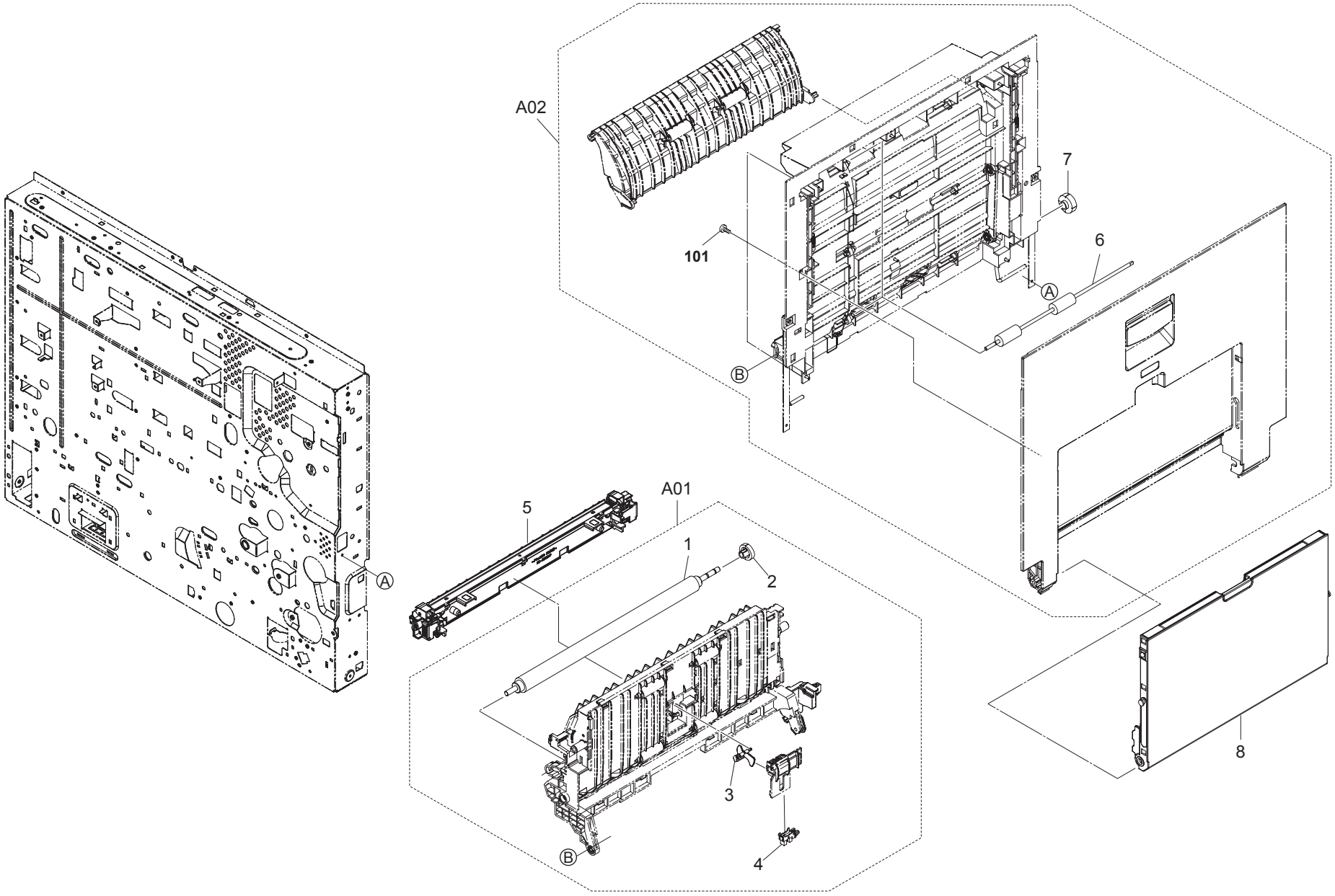
A02
7
101
6
Ⓐ
Ⓑ
A01
5
1
2
3
4
Ⓑ
Ⓐ
8

FIG. 7 Paper Conveying Section

Ref. No.	Part.No.	Alternative Part.No.	Description	Quantity		
				120	230	240
A01	302K394510	2K394510	PARTS CONVEYING UNIT	1	1	1
1	•302K394220	2K394220	PARTS ROLLER REGIST RIGHT SP	1	1	1
2	•302K394330	2K394330	PARTS GEAR REGIST Z24R SP	1	1	1
3	•302K329040	2K329040	ACTUATOR DU	1	1	1
4	•7NXGP1S173LCH01	NX116910	SENSOR OPT.	1	1	1
5	302K393090	2K393090	TR-475	1	1	1
A02	302K394530	2K394530	PARTS RIGHT COVER UNIT	1	1	1
6	•302K394250	2K394250	PARTS ROLLER DU SP	3	3	3
7	•302K394400	2K394400	PARTS GEAR DU Z27L SP	1	1	1
8	302K394470	2K394470	PARTS MPF TABLE ASSY SP	1	1	1
101	7BB200308H	BB105660	+BIND T.T P SCREW 3X8			

Parts with " • " are component parts or sub-assemblies of the assembly appearing immediately above them.

Parts with " • • " are component parts or sub-assembly with " • " appearing immediately above them.

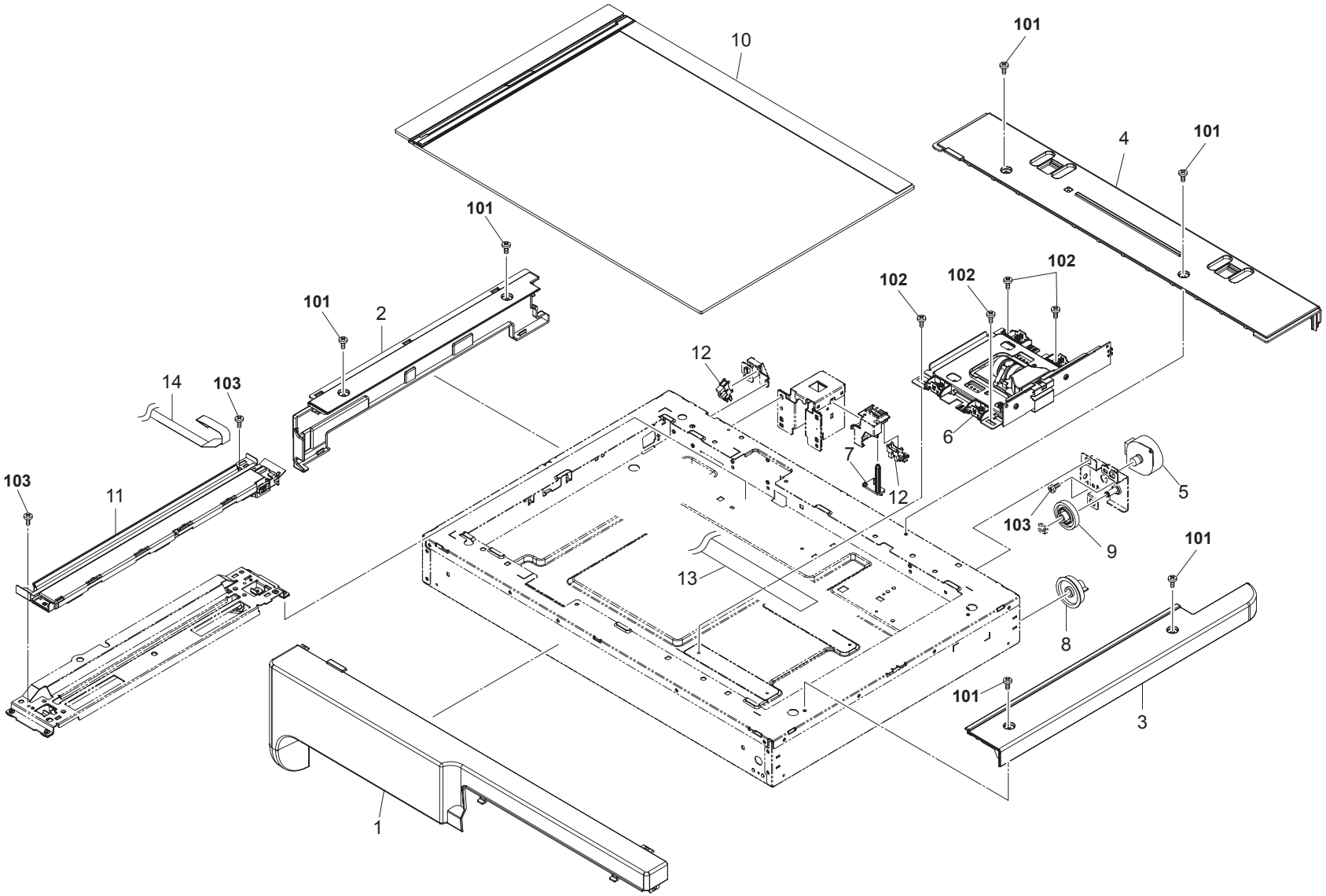
10
101
4
101
101
2
101
102
102
102
12
14
103
6
7
12
103
11
5
103
9
13
101
8
101
3
1

FIG. 8 Scanner Section

Ref. No.	Part.No.	Alternative Part.No.	Description	Quantity		
				120	230	240
1	302K304120	2K304120	COVER ISU FRONT	1	1	1
2	302K304130	2K304130	COVER ISU LEFT	1	1	1
3	302K394590	2K394590	PARTS COVER ISU RIGHT ASSY A SP	1	1	1
4	302K304150	2K304150	COVER ISU REAR	1	1	1
5	302K394210	2K394210	PARTS MOTOR ISU SP	1	1	1
6	302K393150	2K393150	PARTS ISU	1	1	1
7	302K317250	2K317250	SWITCH RELEASE	1	1	1
8	302K317350	2K317350	GEAR Z54	1	1	1
9	302K394370	2K394370	PARTS GEAR Z18-Z63R SP	1	1	1
10	302K394560	2K394560	PARTS CONTACT-GLASS ASSY(I) SP	1		
10	302K394550	2K394550	PARTS CONTACT-GLASS ASSY(C) SP		1	1
11	302K393160	2K393160	PARTS MOUNT LED ASSY	1	1	1
12	7NXGP1S173LCH01	NX116910	SENSOR OPT.	2	2	2
13	302K346410	2K346410	FFC MAIN-CCD	1	1	1
14	302K346400	2K346400	FFC MAIN-LED LAMP	1	1	1
101	7BB702308H	BB107060	+TP-FLAT T.T S SCREW 3X8 SR			
102	7BB606308H	BB105280	+PAN M SCREW WITH SW W 3X8 R			
103	7BB700308H	BB105600	+BIND T.T S SCREW 3X8 SR			

Parts with " • " are component parts or sub-assemblies of the assembly appearing immediately above them.

Parts with " • • " are component parts or sub-assembly with " • " appearing immediately above them.

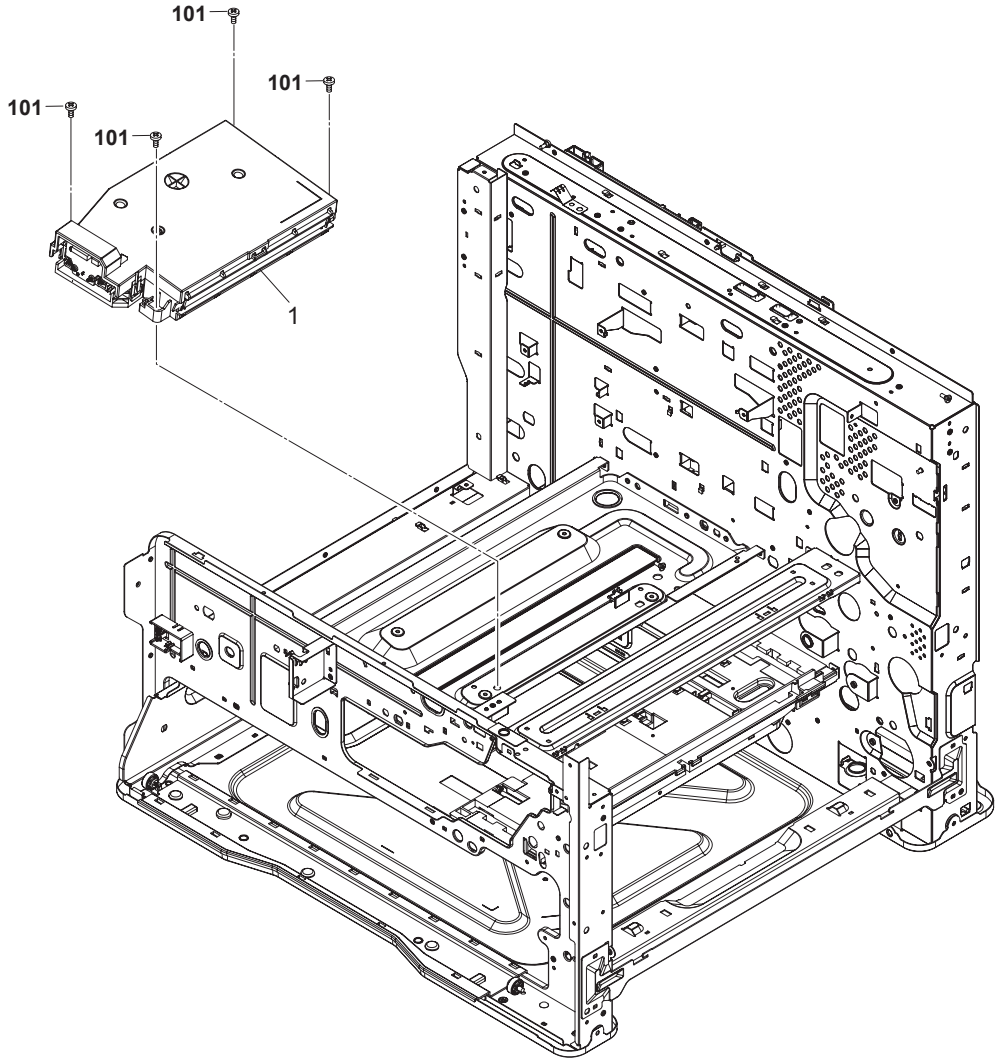
101
101
101
101
1

FIG. 9 Laser Scanner Section

Ref. No.	Part.No.	Alternative Part.No.	Description	Quantity		
				120	230	240
1	302K393070	2K393070	LK-475	1	1	1
101	7BB702308H	BB107060	+TP-FLAT T.T S SCREW 3X8 SR			

Parts with " • " are component parts or sub-assemblies of the assembly appearing immediately above them.

Parts with " • • " are component parts or sub-assembly with " • " appearing immediately above them.

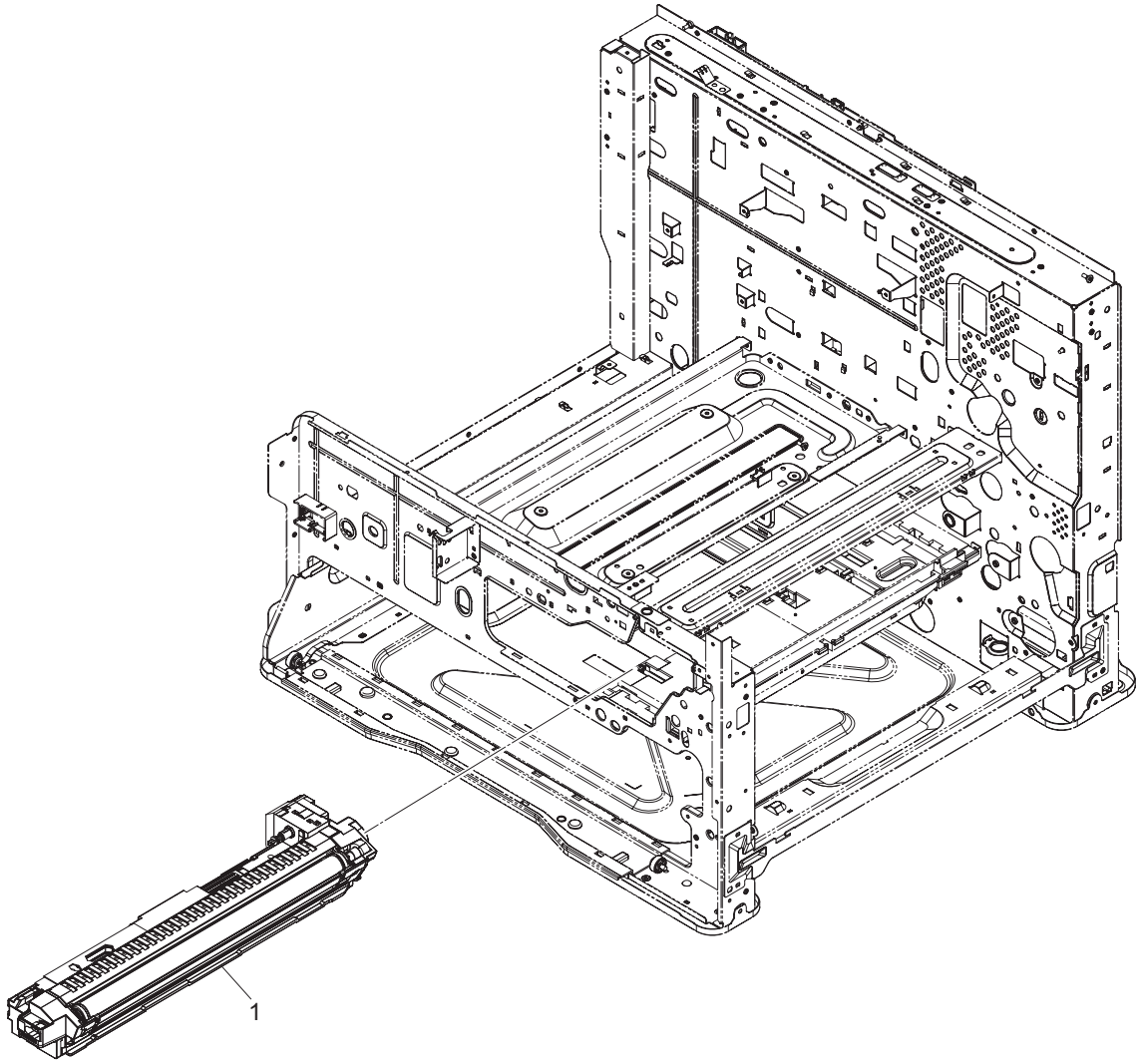
1

FIG. 10 Developing Section

Ref. No.	Part.No.	Alternative Part.No.	Description	Quantity		
				120	230	240
1	302K393040	2K393040	DV-475	1	1	1

Parts with " • " are component parts or sub-assemblies of the assembly appearing immediately above them.

Parts with " • • " are component parts or sub-assembly with " • " appearing immediately above them.

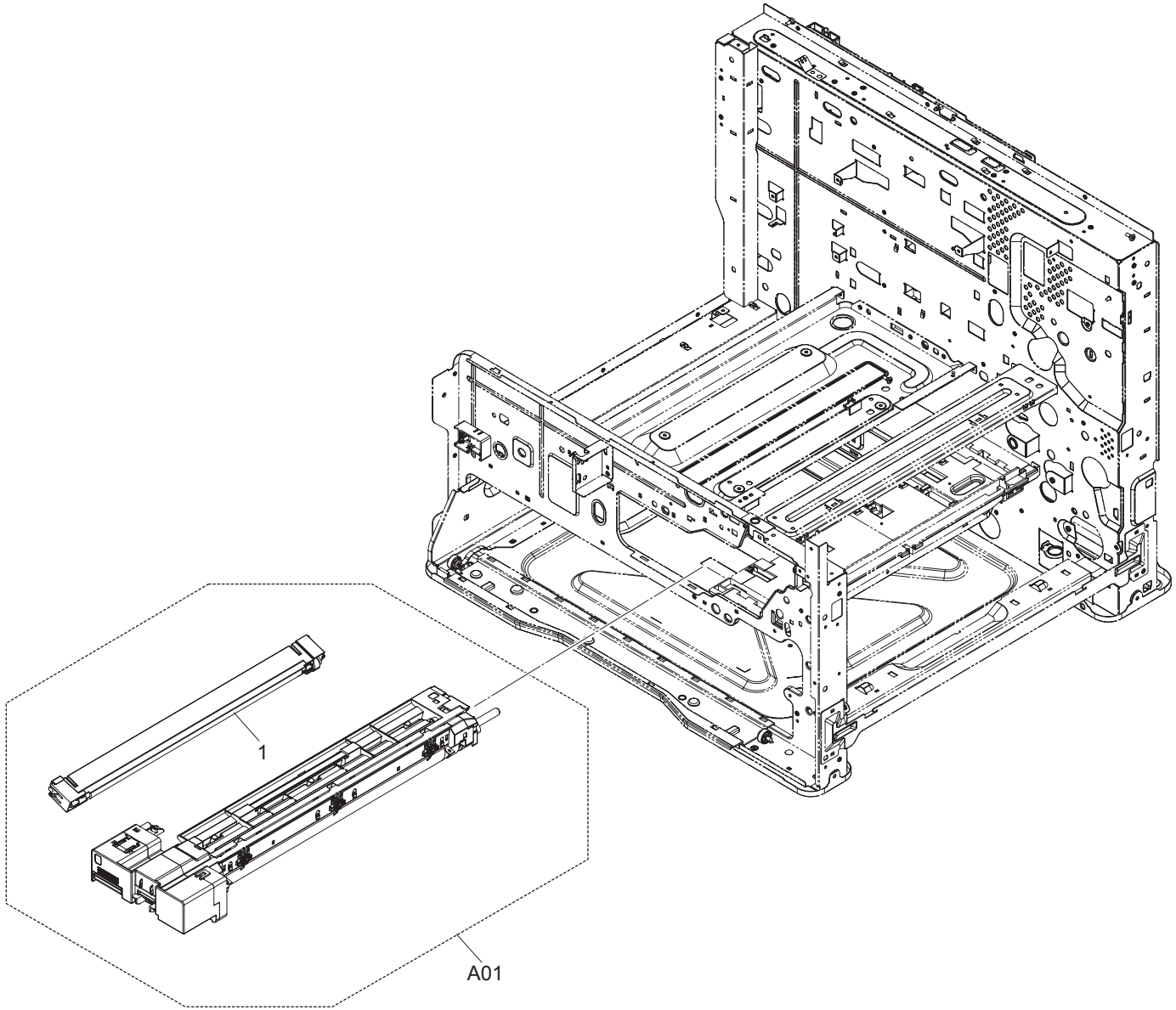
1
A01

FIG. 11 Image Formation Section

Ref. No.	Part.No.	Alternative Part.No.	Description	Quantity		
				120	230	240
A01	302K393030	2K393030	DK-475	1	1	1
1	•302K393140	2K393140	MC-475	1	1	1

Parts with " • " are component parts or sub-assemblies of the assembly appearing immediately above them.

Parts with " • • " are component parts or sub-assembly with " • " appearing immediately above them.

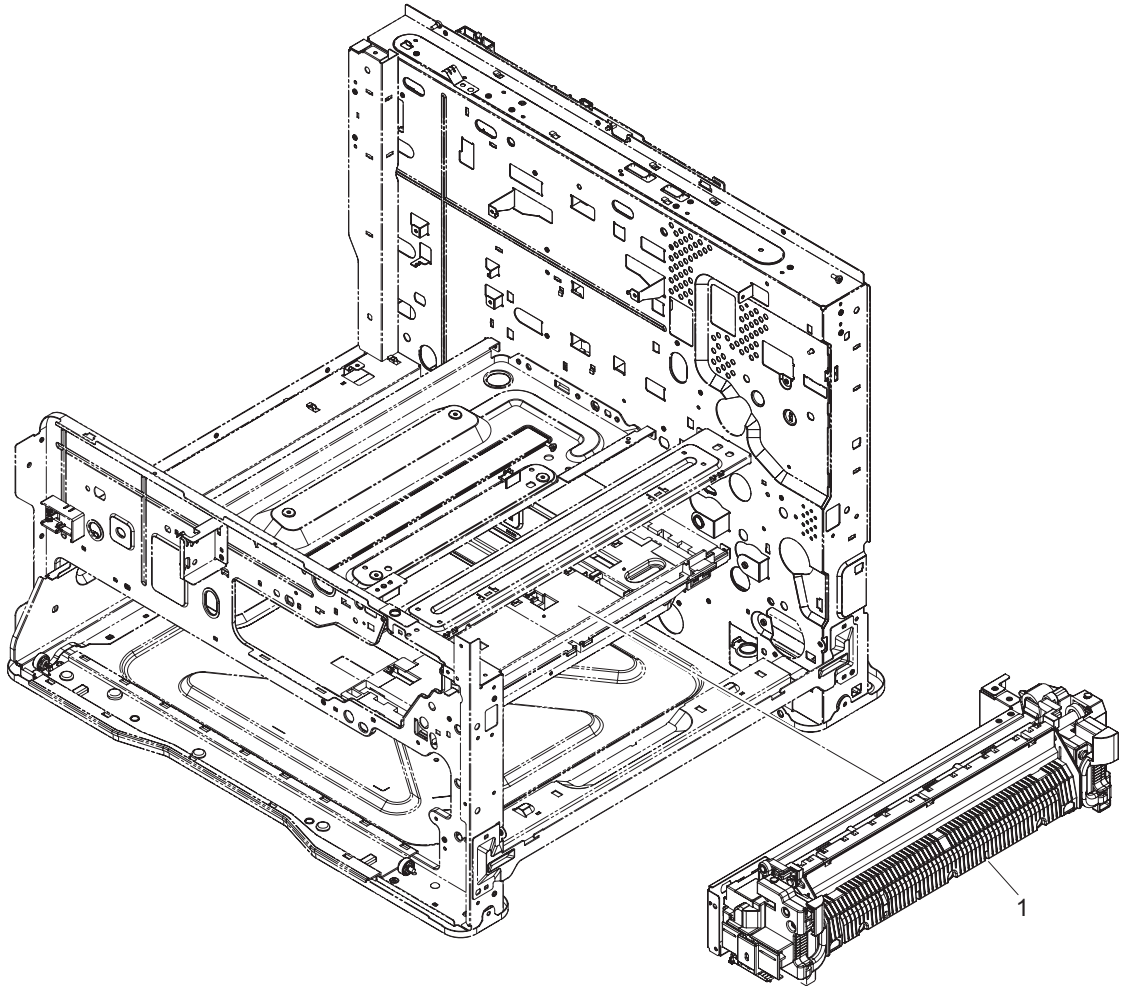
1

FIG. 12 Fuser Section

Ref. No.	Part.No.	Alternative Part.No.	Description	Quantity		
				120	230	240
1	302K393110	2K393110	FK-475(U)	1		
1	302K393120	2K393120	FK-475(E)		1	1

Parts with " • " are component parts or sub-assemblies of the assembly appearing immediately above them.

Parts with " • • " are component parts or sub-assembly with " • " appearing immediately above them.

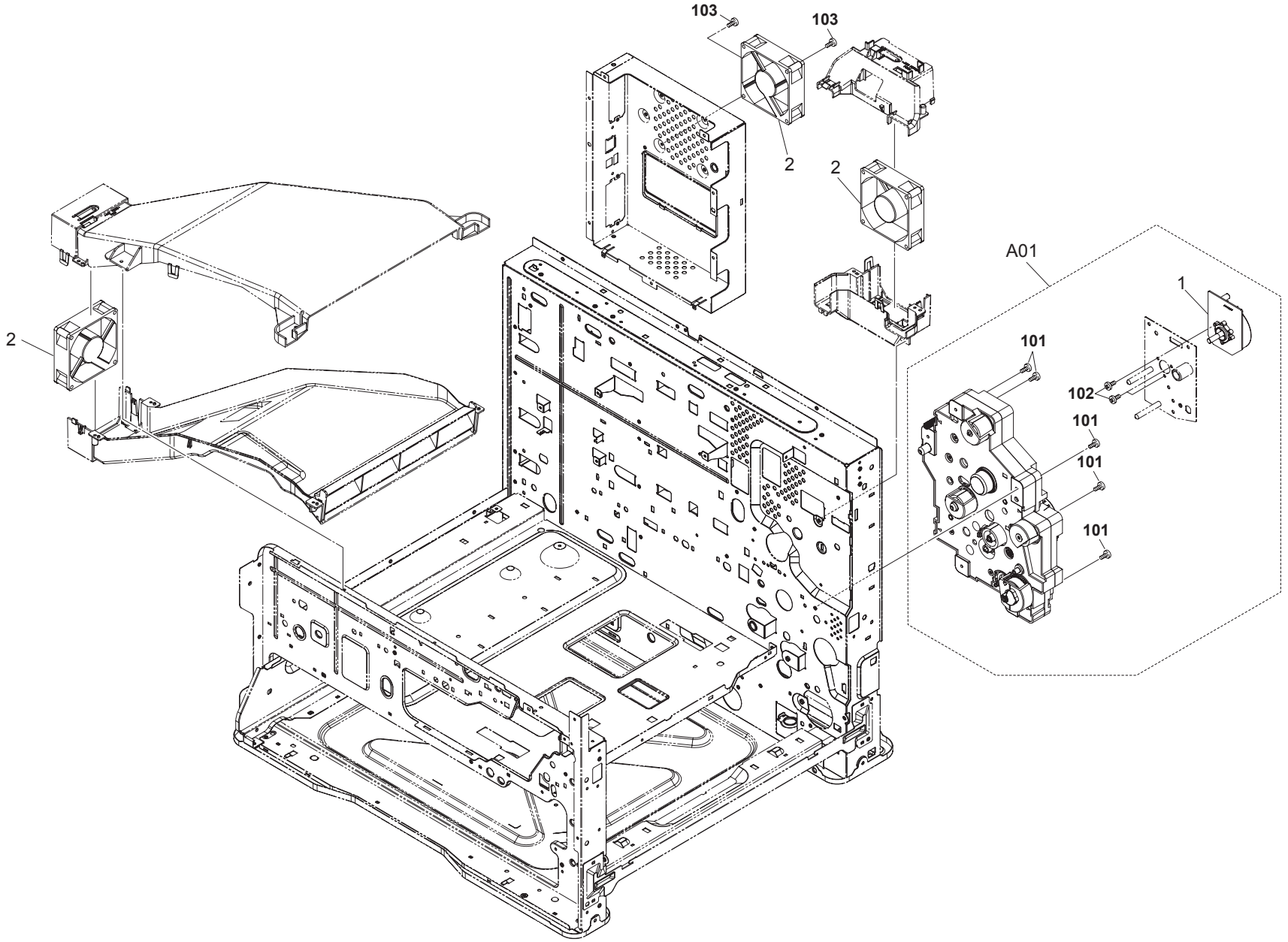
103
103
2
2
2
A01
1
101
102
101
101
101

FIG. 13 Drive Section

Ref. No.	Part.No.	Alternative Part.No.	Description	Quantity		
				120	230	240
A01	302K393080	2K393080	DR-475	1	1	1
1	•302K394200	2K394200	PARTS MOTOR-BL W30 SP	1	1	1
2	302HN44010	2HN44010	FAN MOTOR	3	3	3
101	7BB700312H	BB106820	+BIND T.T S SCREW 3X12 SR			
102	7BB000304H	BB105720	+BIND M SCREW 3X4			
103	7BB700330H	BB106840	+BIND T.T S SCREW 3X30 SR			

Parts with " • " are component parts or sub-assemblies of the assembly appearing immediately above them.

Parts with " • • " are component parts or sub-assembly with " • " appearing immediately above them.

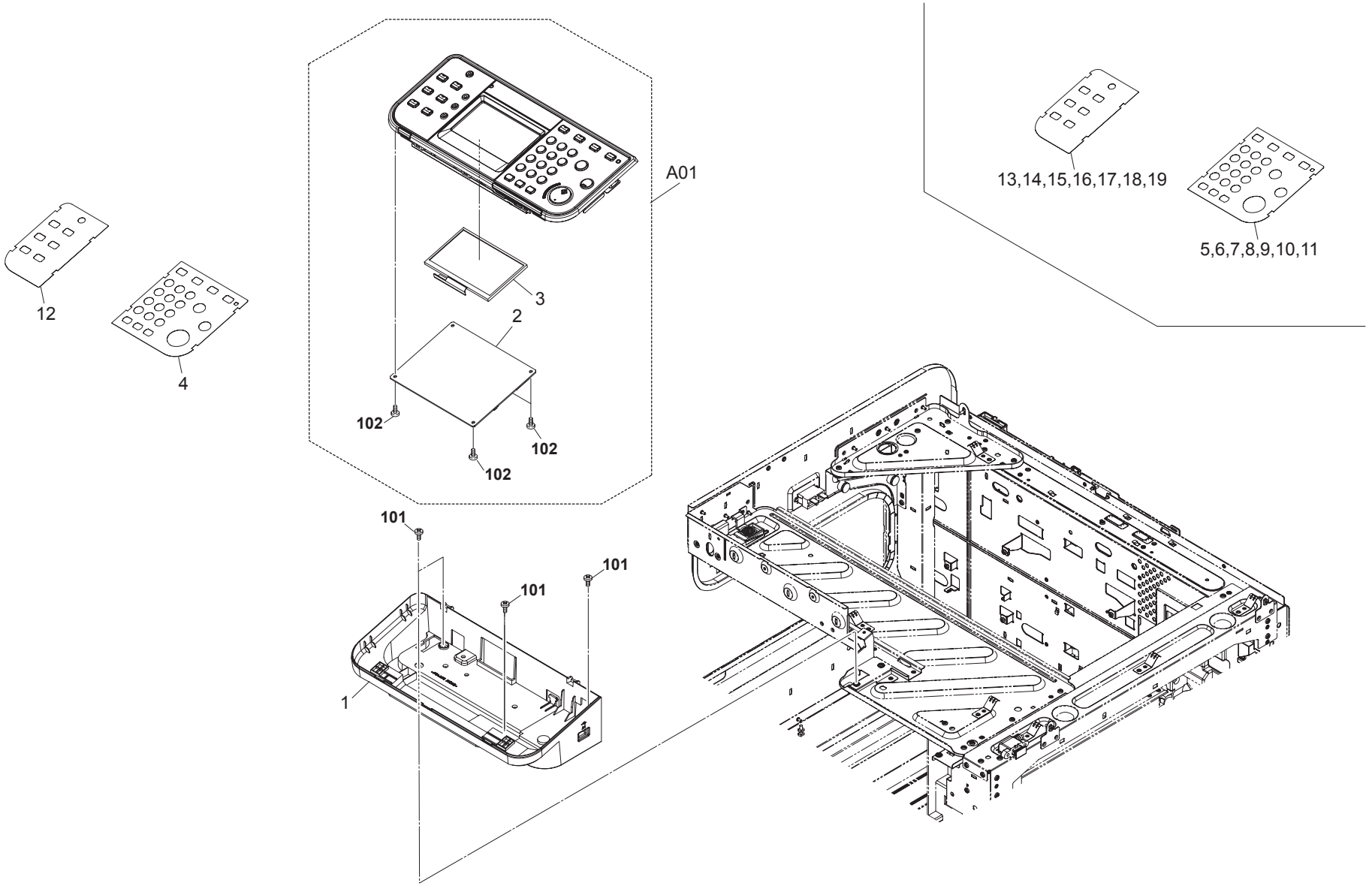
A01
12
4
3
2
102
102
102
101
101
101
1
13,14,15,16,17,18,19
5,6,7,8,9,10,11

Ref. No.	Part.No.	Alternative Part.No.	Description	Quantity		
				120	230	240
1	302K305020	2K305020	COVER OPERATION LOW	1	1	1
A01	302K394420	2K394420	PARTS OPERATION UNIT SP	1	1	1
2	•302K394050	2K394050	PARTS PWB PANEL MAIN ASSY SP	1	1	1
3	•302K394170	2K394170	PARTS LCD COLOR SP	1	1	1
4	302K305310	2K305310	SHEET OPERATION RIGHT E	1	1	1
5	302K305350	2K305350	SHEET OPERATION RIGHT G		1	
6	302K305360	2K305360	SHEET OPERATION RIGHT F	1	1	
7	302K305370	2K305370	SHEET OPERATION RIGHT I		1	
8	302K305380	2K305380	SHEET OPERATION RIGHT S	1	1	
9	302K305390	2K305390	SHEET OPERATION RIGHT P(B)	1	1	
10	302K305400	2K305400	SHEET OPERATION RIGHT N		1	
11	302K305410	2K305410	SHEET OPERATION RIGHT R		1	
12	302K305320	2K305320	SHEET OPERATION LEFT E	1	1	1
13	302K305440	2K305440	SHEET OPERATION LEFT G		1	
14	302K305450	2K305450	SHEET OPERATION LEFT F	1	1	
15	302K305460	2K305460	SHEET OPERATION LEFT I		1	
16	302K305470	2K305470	SHEET OPERATION LEFT S	1	1	
17	302K305480	2K305480	SHEET OPERATION LEFT P(B)	1	1	
18	302K305490	2K305490	SHEET OPERATION LEFT N		1	
19	302K305500	2K305500	SHEET OPERATION LEFT R		1	
101	7BB702308H	BB107060	+TP-FLAT T.T S SCREW 3X8 SR			
102	7BB700308H	BB105600	+BIND T.T S SCREW 3X8 SR			

Parts with " • " are component parts or sub-assemblies of the assembly appearing immediately above them.

Parts with " • • " are component parts or sub-assembly with " • " appearing immediately above them.

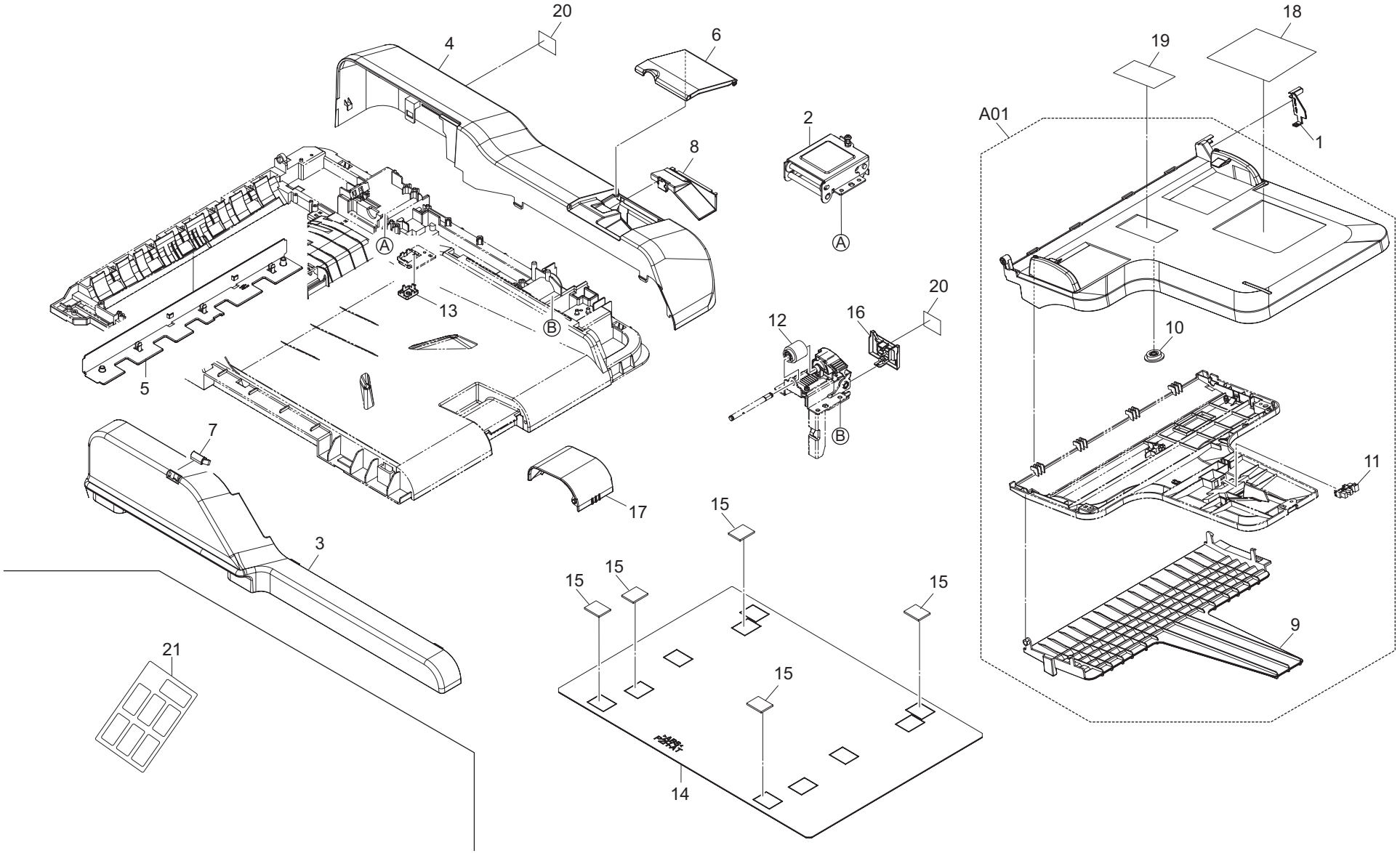
20
4
6
18
19
A01
1
2
8
A
13
B
20
12
16
10
5
7
B
11
17
15
3
15
15
15
9
21
15
14

FIG. 15 Document Processor 1

2K3/2L3

Ref. No.	Part.No.	Alternative Part.No.	Description	Quantity		
				120	230	240
1	303LL06100	3LL06100	COVER TABLE WIRE	1	1	1
2	303M802020	3M802020	LEFT HINGE	1	1	1
3	303M804010	3M804010	COVER FRONT	1	1	1
4	303M804020	3M804020	COVER REAR	1	1	1
5	303M804040	3M804040	COVER LEFT	1	1	1
6	303M804060	3M804060	LID REAR COVER	1	1	1
7	303M804070	3M804070	COVER LED	1	1	1
8	303M804080	3M804080	LID INNER COVER	1	1	1
A01	303M894060	3M894060	PARTS TABLE ASSY SP	1	1	1
9	•303M806050	3M806050	TRAY LOOP	1	1	1
10	•65907210	65907210	GEAR 20,CASSETTE	1	1	1
11	•303M894260	3M894260	PARTS SENSOR OPT SP	1	1	1
12	3AK20130	3AK20130	GEAR,WORM MAIN TRAY	1	1	1
13	3HL02240	3HL02240	PUSH SW DP	1	1	1
14	303JC04200	3JC04200	PLATE ORIGINAL	1	1	1
15	303MX02021	3MX02021	CUSHION ORIGINAL MAT A	5	5	5
16	303M804090	3M804090	COVER HINGE	1	1	1
17	303M804050	3M804050	STOPPER EJECT	1	1	1
18	303M834110	3M834110	LABEL PAPER SET CAUTION ENG	1	1	1
19	303H605110	3H605110	LABEL MSP A	1	1	1
20	303M834070	3M834070	LABEL HINGE CAUTION	2	2	2
21	303LL34190	3LL34190	LABEL FACE UP 7NATIONS	1	1	1

Parts with " • " are component parts or sub-assemblies of the assembly appearing immediately above them.

Parts with " • • " are component parts or sub-assembly with " • " appearing immediately above them.

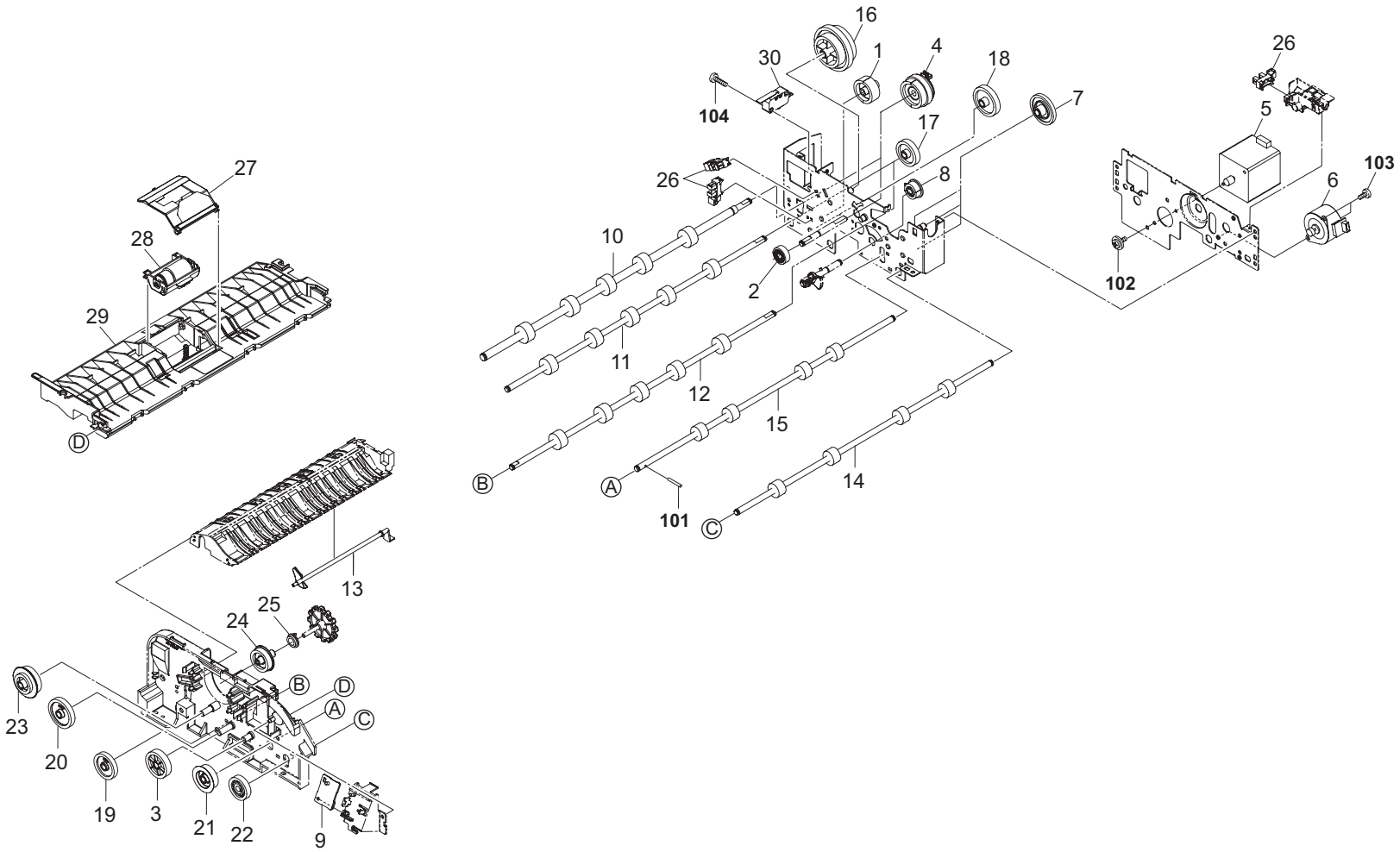
16
30
1
4
18
26
104
7
17
5
103
26
8
6
27
10
28
2
102
29
11
12
15
D
B
A
14
101
C
13
25
24
B
D
A
C
23
20
19
3
21
22
9

FIG. 16 Document Processor 2

Ref. No.	Part.No.	Alternative Part.No.	Description	Quantity		
				120	230	240
1	302F914160	2F914160	GEAR Z30H	1	1	1
2	302H731700	2H731700	GEAR Z21 CONT	1	1	1
3	302H731730	2H731730	GEAR Z34L MIDDLE	1	1	1
4	303M894090	3M894090	PARTS CLUTCH 50 Z35R SP	2	2	2
5	302KY44010	2KY44010	MOTOR IMAGE	1	1	1
6	302KY44090	2KY44090	MOTOR ROTARY	1	1	1
7	303H622331	3H622331	GEAR 20/65 IDLE	3	3	3
8	303LL31260	3LL31260	GEAR Z32S LIFT	1	1	1
9	303M894100	3M894100	PARTS PWB LED ASSY SP	1	1	1
10	303M894110	3M894110	PARTS ROLLER REGISTRATION SP	1	1	1
11	303M894120	3M894120	PARTS ROLLER CONVEYING A SP	1	1	1
12	303M894130	3M894130	PARTS ROLLER CONVEYING B SP	1	1	1
13	303M824110	3M824110	ACTUATOR REGISTRATION	1	1	1
14	303M894140	3M894140	PARTS ROLLER EXIT SP	1	1	1
15	303M894150	3M894150	PARTS ROLLER LOOP SP	1	1	1
16	303M894160	3M894160	PARTS GEAR Z41L Z58L Z76L SP	1	1	1
17	303M894170	3M894170	PARTS GEAR Z32R SP	2	2	2
18	303M894180	3M894180	PARTS GEAR Z38L SP	1	1	1
19	303M894190	3M894190	PARTS GEAR Z33L SP	1	1	1
20	303M894200	3M894200	PARTS GEAR Z34R Z26S SP	1	1	1
21	303M894210	3M894210	PARTS GEAR Z29R SP	1	1	1
22	303M894220	3M894220	PARTS GEAR Z29L ONEWAY SP	1	1	1
23	303M894240	3M894240	PARTS GEAR Z39S SP	1	1	1
24	303M894250	3M894250	PARTS GEAR LF Z29S SP	1	1	1
25	36211500	36211500	GEAR,LEADING FEED JOINT	1	1	1
26	303M894260	3M894260	PARTS SENSOR OPT SP	3	3	3
27	303M894030	3M894030	RETARD GUIDE (DP) (service only)	1	1	1
28	303M894040	3M894040	RETARD ROLLER (DP) (service only)	1	1	1
29	303M894070	3M894070	PARTS GUIDE PF ASSY SP	1	1	1
30	2FB27160	2FB27160	INTER LOCK SWITCH	1	1	1
101	5MBP2010PXLJ	EP120100	PARALLEL PIN H7 / M2 X 10 SUS			
102	7BB607306H	BB105770	+TP-CUP M SCREW 3X6 R			
103	7BB700308H	BB105600	+BIND T.T S SCREW 3X8 SR			
104	7BB700316H	BB106910	+BIND T.T S SCREW 3X16 SR			

Parts with " • " are component parts or sub-assemblies of the assembly appearing immediately above them.

Parts with " • • " are component parts or sub-assembly with " • " appearing immediately above them.

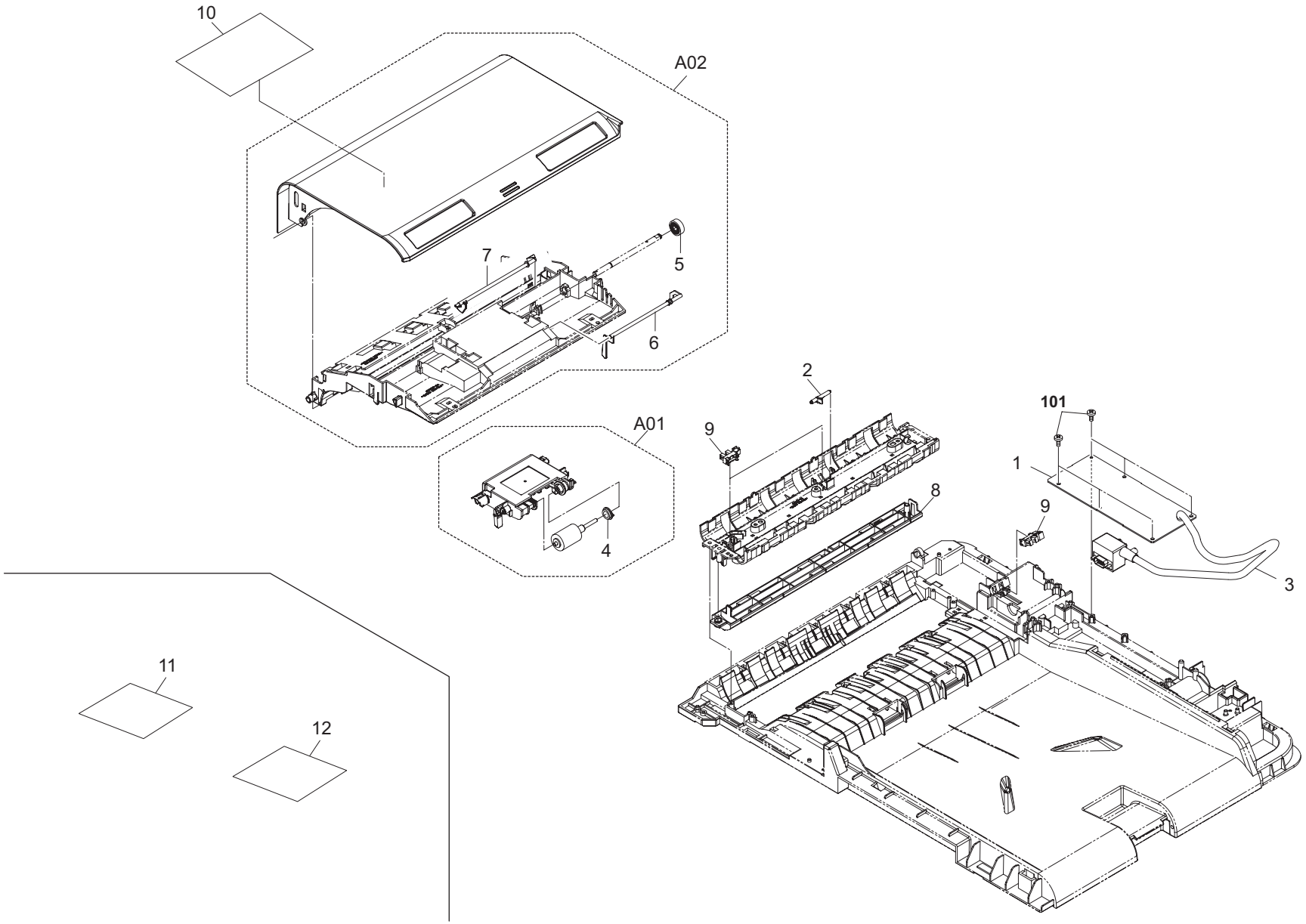
10
A02
7
5
6
A01
4
2
9
101
1
8
9
3
11
12

FIG. 17 Document Processor 3

2K3/2L3

Ref. No.	Part.No.	Alternative Part.No.	Description	Quantity		
				120	230	240
1	303M894010	3M894010	PARTS PWB DRIVE ASSY SP	1	1	1
2	303M824190	3M824190	ACTUATOR TIMING	1	1	1
3	303M846010	3M846010	WIRE INTERFACE	1	1	1
A01	303M894020	3M894020	FEED ROLLER (DP) (service only)	1	1	1
4	.36211500	36211500	GEAR,LEADING FEED JOINT	1	1	1
A02	303M894050	3M894050	PARTS COVER PF ASSY SP	1	1	1
5	.302H731700	2H731700	GEAR Z21 CONT	1	1	1
6	.303M807060	3M807060	ACTUATOR ORIGINAL SET	1	1	1
7	.303M824090	3M824090	ACTUATOR FEED	1	1	1
8	303M894080	3M894080	PARTS GUIDE READING ASSY SP	1	1	1
9	303M894260	3M894260	PARTS SENSOR OPT SP	3	3	3
10	303M834090	3M834090	LABEL CAUTION ENG	1	1	1
11	303M834120	3M834120	LABEL CAUTION SET 3NATIONS	1	1	
12	303M834130	3M834130	LABEL CAUTION SET 4NATIONS		1	
101	7BB200308H	BB105660	+BIND T.T P SCREW 3X8			

Parts with " • " are component parts or sub-assemblies of the assembly appearing immediately above them.

Parts with " • • " are component parts or sub-assembly with " • " appearing immediately above them.

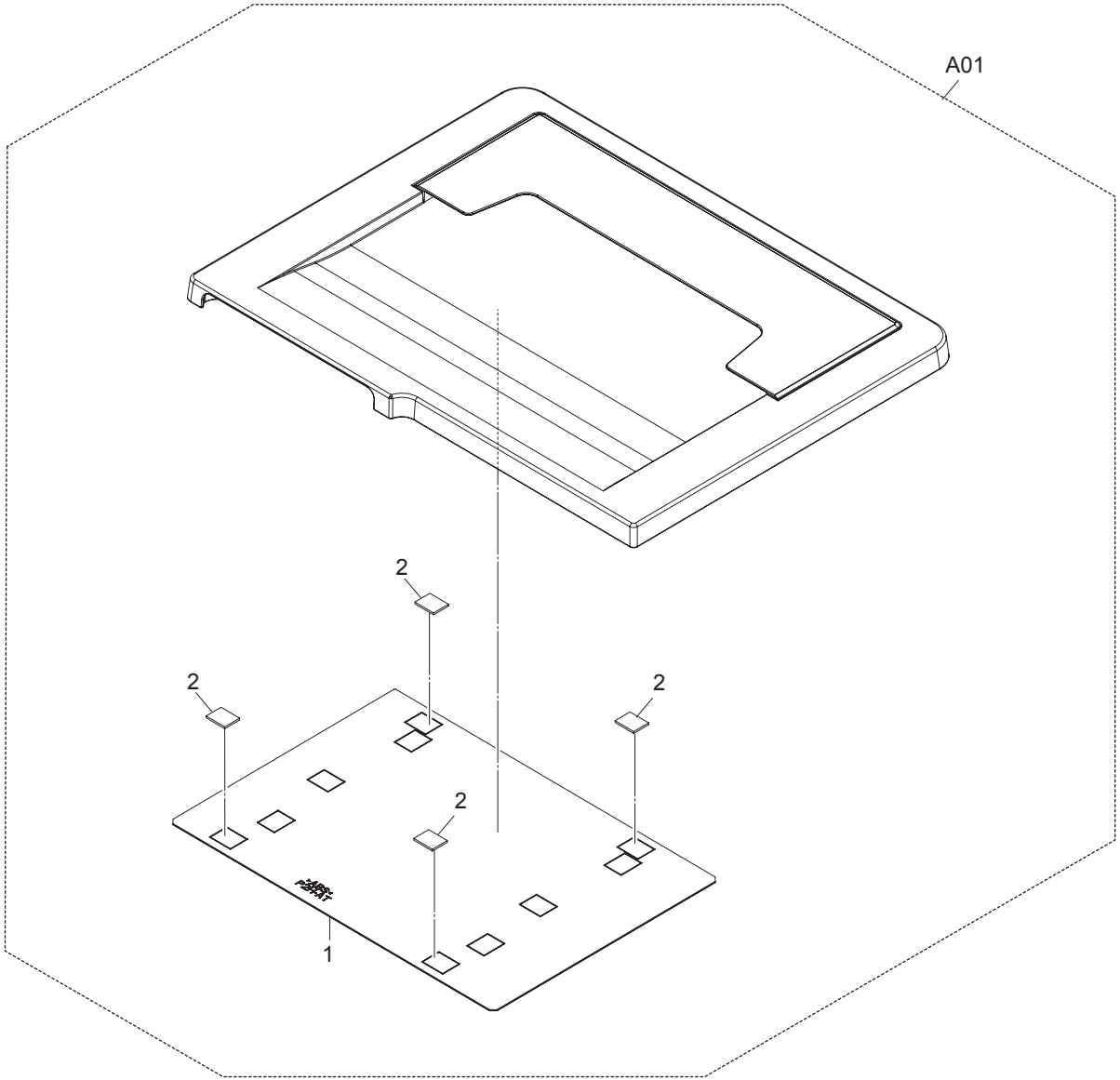
A01
2
2
2
2
1

Ref. No.	Part.No.	Alternative Part.No.	Description	Quantity		
				120	230	240
A01	302L394010	2L394010	PARTS PLATEN COVER UNIT	1	1	1
1	•303JC04200	3JC04200	PLATE ORIGINAL	1	1	1
2	•303MX02021	3MX02021	CUSHION ORIGINAL MAT A	4	4	4

Parts with " • " are component parts or sub-assemblies of the assembly appearing immediately above them.

Parts with " • • " are component parts or sub-assembly with " • " appearing immediately above them.

FIG. 19 Maintenance Kits

Ref. No.	Part.No.	Alternative Part.No.	Description	Quantity		
				120	230	240
	1702K37US0	072K37US	MK-477/MAINTENANCE KIT(OPTION)	1		
			PRIMARY FEED UNIT	1		
			TR-475	1		
			SEPARATION PAD(service only)	1		
			MPF ROLLER(service only)	1		
			REGIST CLEANER	1		
			DK-475	1		
			DV-475	1		
			FK-475(U)	1		
	1702K38NL0	072K38NL	MK-475/MAINTENANCE KIT(OPTION)		1	
			PRIMARY FEED UNIT		1	
			TR-475		1	
			SEPARATION PAD(service only)		1	
			MPF ROLLER(service only)		1	
			REGIST CLEANER		1	
			DK-475		1	
			DV-475		1	
			FK-475(E)		1	
	1702K38AS0	072K38AS	MK-479/MAINTENANCE KIT(OPTION)			1
			PRIMARY FEED UNIT			1
			TR-475			1
			SEPARATION PAD(service only)			1
			MPF ROLLER(service only)			1
			REGIST CLEANER			1
			DK-475			1
			DV-475			1
			FK-475(E)			1
	1703M80UN0	073M80UN	MK-470/MAINTENANCE KIT(OPTION) (for customer) (Document Processor Standard model)	1	1	1
			FEED ROLLER (DP) (service only)	1	1	1
			RETARD GUIDE (DP) (service only)	1	1	1
			RETARD ROLLER (DP) (service only)	1	1	1

Parts with " • " are component parts or sub-assemblies of the assembly appearing immediately above them.

Parts with " • • " are component parts or sub-assembly with " • " appearing immediately above them.

Part.No.	Alternative	Description	Fig.No.
1702K37US0	072K37US	MK-477/MAINTENANCE KIT	19
1702K38AS0	072K38AS	MK-479/MAINTENANCE KIT	19
1702K38NL0	072K38NL	MK-475/MAINTENANCE KIT	19
1703M80UN0	073M80UN	MK-470/MAINTENANCE KIT	19
2AR27800	2AR27800	POWER CORD(230)	2
2FB27160	2FB27160	INTER LOCK SWITCH	16
3019527401	19527401	POWER CORD(120)	2
302F914160	2F914160	GEAR Z30H	16
302F944090	2F944090	SOLENOID ASSY	6
302H004560	2H004560	STOPPER PAPER	1
302H731700	2H731700	GEAR Z21 CONT	16,17
302H731730	2H731730	GEAR Z34L MIDDLE	16
302HN44010	2HN44010	FAN MOTOR	13
302HN44100	2HN44100	MOTOR REVERSE	6
302K302430	2K302430	HEATER DEHUMIDIFIER 120	3
302K302440	2K302440	HEATER DEHUMIDIFIER 240	3
302K302810	2K302810	ACTUATOR PAPER EMPTY	2
302K302830	2K302830	ACTUATOR DECK FEED	2
302K304020	2K304020	COVER FRONT TOP	1
302K304030	2K304030	COVER TRAY	1
302K304040	2K304040	COVER EXIT REAR	1
302K304050	2K304050	COVER EXIT FRONT	1
302K304060	2K304060	COVER RIGHT REAR	1
302K304070	2K304070	COVER RIGHT LOW	1
302K304080	2K304080	COVER INNER LOW	2
302K304100	2K304100	COVER LEFT LOW	1
302K304110	2K304110	COVER LEFT TOP	1
302K304120	2K304120	COVER ISU FRONT	8
302K304130	2K304130	COVER ISU LEFT	8
302K304150	2K304150	COVER ISU REAR	8
302K304170	2K304170	LID CONTROLLER BOX	1
302K304180	2K304180	COVER TRAY LEFT	1
302K304190	2K304190	COVER EXIT TOP	1
302K304200	2K304200	COVER FILTER REAR	1
302K304290	2K304290	COVER EXIT FRONT TOP	1
302K304370	2K304370	STOPPER PAPER B	1
302K305020	2K305020	COVER OPERATION LOW	14
302K305310	2K305310	SHEET OPERATION RIGHT E	14
302K305320	2K305320	SHEET OPERATION LEFT E	14
302K305350	2K305350	SHEET OPERATION RIGHT G	14

Part.No.	Alternative	Description	Fig.No.
302K305360	2K305360	SHEET OPERATION RIGHT F	14
302K305370	2K305370	SHEET OPERATION RIGHT I	14
302K305380	2K305380	SHEET OPERATION RIGHT S	14
302K305390	2K305390	SHEET OPERATION RIGHT P(B)	14
302K305400	2K305400	SHEET OPERATION RIGHT N	14
302K305410	2K305410	SHEET OPERATION RIGHT R	14
302K305440	2K305440	SHEET OPERATION LEFT G	14
302K305450	2K305450	SHEET OPERATION LEFT F	14
302K305460	2K305460	SHEET OPERATION LEFT I	14
302K305470	2K305470	SHEET OPERATION LEFT S	14
302K305480	2K305480	SHEET OPERATION LEFT P(B)	14
302K305490	2K305490	SHEET OPERATION LEFT N	14
302K305500	2K305500	SHEET OPERATION LEFT R	14
302K308020	2K308020	ACTUATOR MPF	5
302K309080	2K309080	COVER CASSETTE	4
302K309120	2K309120	CURSOR CASSETTE REAR	4
302K309130	2K309130	CURSOR CASSETTE FRONT	4
302K309270	2K309270	CURSOR END	4
302K309410	2K309410	PLATE SIZE DETECTION	3
302K317250	2K317250	SWITCH RELEASE	8
302K317350	2K317350	GEAR Z54	8
302K328060	2K328060	ACTUATOR EXIT OVERFLOW	6
302K328070	2K328070	ACTUATOR EXIT UPPER SWITCH	6
302K328160	2K328160	ARM ACTUATOR EXIT	6
302K328300	2K328300	TRAY EJECT	6
302K329040	2K329040	ACTUATOR DU	7
302K346370	2K346370	FFC ENGINE-HVU	3
302K346380	2K346380	FFC ENGINE-MAIN	3
302K346400	2K346400	FFC MAIN-LED LAMP	8
302K346410	2K346410	FFC MAIN-CCD	8
302K393030	2K393030	DK-475	11
302K393040	2K393040	DV-475	10
302K393070	2K393070	LK-475	9
302K393080	2K393080	DR-475	13
302K393090	2K393090	TR-475	7
302K393110	2K393110	FK-475(U)	12
302K393120	2K393120	FK-475(E)	12
302K393130	2K393130	WT-475	1
302K393140	2K393140	MC-475	11
302K393150	2K393150	PARTS ISU	8

Part.No.	Alternative	Description	Fig.No.
302K393160	2K393160	PARTS MOUNT LED ASSY	8
302K393170	2K393170	CT-475	4
302K394010	2K394010	PARTS PWB MAIN ASSY SP	3
302K394020	2K394020	PARTS PWB MAIN ASSY SP EU	3
302K394040	2K394040	PARTS PWB ENGINE ASSY SP	3
302K394050	2K394050	PARTS PWB PANEL MAIN ASSY SP	14
302K394070	2K394070	PARTS PWB RFID ASSY SP	2
302K394080	2K394080	PARTS PWB DRUM CONNECT ASSY SP	2
302K394090	2K394090	PARTS PWB DEVE CONNECT ASSY SP	2
302K394100	2K394100	PARTS PWB HUMIDITY SENSOR ASSY SP	2
302K394110	2K394110	PARTS LVU MAIN 120 SP	2
302K394120	2K394120	PARTS LVU MAIN 200 SP	2
302K394140	2K394140	PARTS HVU SP	3
302K394150	2K394150	PARTS LVU SUB 100 SP	3
302K394160	2K394160	PARTS LVU SUB 200 SP	3
302K394170	2K394170	PARTS LCD COLOR SP	14
302K394180	2K394180	PARTS SWITCH EXIT PAPER EMPTY SP	6
302K394190	2K394190	PARTS MOTOR LIFT ASSY SP	2
302K394200	2K394200	PARTS MOTOR-BL W30 SP	13
302K394210	2K394210	PARTS MOTOR ISU SP	8
302K394220	2K394220	PARTS ROLLER REGIST RIGHT SP	7
302K394230	2K394230	PARTS ROLLER REGIST LEFT SP	5
302K394240	2K394240	PARTS ROLLER EXIT SP	6
302K394250	2K394250	PARTS ROLLER DU SP	7
302K394260	2K394260	PARTS GEAR CONTAINER Z18L SP	2
302K394270	2K394270	PARTS GEAR CONTAINER Z25L SP	2
302K394280	2K394280	PARTS GEAR CONTAINER Z35R SP	2
302K394290	2K394290	PARTS GEAR CONTAINER Z24L-Z19R SP	2
302K394300	2K394300	PARTS GEAR CONTAINER Z41L SP	2
302K394310	2K394310	PARTS GEAR REGIST Z28L-Z18L SP	5
302K394320	2K394320	PARTS GEAR MPF Z28 SP	5
302K394330	2K394330	PARTS GEAR REGIST Z24R SP	7
302K394340	2K394340	PARTS GEAR Z74R-Z22S EXIT SP	6
302K394350	2K394350	PARTS GEAR Z22S EXIT SP	6
302K394360	2K394360	PARTS GEAR Z25S EXIT INPUT SP	6
302K394370	2K394370	PARTS GEAR Z18-Z63R SP	8
302K394380	2K394380	PARTS GEAR Z18 SP	4
302K394390	2K394390	PARTS GEAR CONTAINER Z20R SP	2
302K394400	2K394400	PARTS GEAR DU Z27L SP	7
302K394420	2K394420	PARTS OPERATION UNIT SP	14

Part.No.	Alternative	Description	Fig.No.
302K394430	2K394430	PARTS COVER FRONT ASSY 30 J/E SP	1
302K394440	2K394440	PARTS COVER FRONT ASSY 30 A SP	1
302K394450	2K394450	REGIST CLEANER	5
302K394460	2K394460	MPF ROLLER	5
302K394470	2K394470	PARTS MPF TABLE ASSY SP	7
302K394480	2K394480	PRIMARY FEED UNIT	5
302K394490	2K394490	SEPARATION PAD	5
302K394500	2K394500	PARTS MPF UNIT	5
302K394510	2K394510	PARTS CONVEYING UNIT	7
302K394520	2K394520	PARTS EXIT UNIT	6
302K394530	2K394530	PARTS RIGHT COVER UNIT	7
302K394540	2K394540	PARTS FEED UNIT ASSY SP	5
302K394550	2K394550	PARTS CONTACT-GLASS ASSY(C) SP	8
302K394560	2K394560	PARTS CONTACT-GLASS ASSY(I) SP	8
302K394580	2K394580	PARTS COVER RIGHT TOP ASSY SP	1
302K394590	2K394590	PARTS COVER ISU RIGHT ASSY A SP	8
302K394610	2K394610	PARTS COVER REAR ASSY SP	1
302K394620	2K394620	MPF ROLLER-PAD SET	5
302KK94070	2KK94070	PARTS CONT SENSOR ASSY SP	2
302KY44010	2KY44010	MOTOR IMAGE	16
302KY44090	2KY44090	MOTOR ROTARY	16
302L302010	2L302010	LID D SUB	1
302L394010	2L394010	PARTS PLATEN COVER UNIT	18
302L394020	2L394020	PARTS COVER FRONT ASSY 25 J/E SP	1
302L394030	2L394030	PARTS COVER FRONT ASSY 25 A SP	1
303H605110	3H605110	LABEL MSP A	15
303H622331	3H622331	GEAR 20/65 IDLE	16
303JC04200	3JC04200	PLATE ORIGINAL	15,18
303LL06100	3LL06100	COVER TABLE WIRE	15
303LL31260	3LL31260	GEAR Z32S LIFT	16
303LL34190	3LL34190	LABEL FACE UP 7NATIONS	15
303M802020	3M802020	LEFT HINGE	15
303M804010	3M804010	COVER FRONT	15
303M804020	3M804020	COVER REAR	15
303M804040	3M804040	COVER LEFT	15
303M804050	3M804050	STOPPER EJECT	15
303M804060	3M804060	LID REAR COVER	15
303M804070	3M804070	COVER LED	15
303M804080	3M804080	LID INNER COVER	15
303M804090	3M804090	COVER HINGE	15

Part.No.	Alternative	Description	Fig.No.
303M806050	3M806050	TRAY LOOP	15
303M807060	3M807060	ACTUATOR ORIGINAL SET	17
303M824090	3M824090	ACTUATOR FEED	17
303M824110	3M824110	ACTUATOR REGISTRATION	16
303M824190	3M824190	ACTUATOR TIMING	17
303M834070	3M834070	LABEL HINGE CAUTION	15
303M834090	3M834090	LABEL CAUTION ENG	17
303M834110	3M834110	LABEL PAPER SET CAUTION ENG	15
303M834120	3M834120	LABEL CAUTION SET 3NATIONS	17
303M834130	3M834130	LABEL CAUTION SET 4NATIONS	17
303M846010	3M846010	WIRE INTERFACE	17
303M894010	3M894010	PARTS PWB DRIVE ASSY SP	17
303M894020	3M894020	FEED ROLLER (DP)	17
303M894030	3M894030	RETARD GUIDE (DP)	16
303M894040	3M894040	RETARD ROLLER (DP)	16
303M894050	3M894050	PARTS COVER PF ASSY SP	17
303M894060	3M894060	PARTS TABLE ASSY SP	15
303M894070	3M894070	PARTS GUIDE PF ASSY SP	16
303M894080	3M894080	PARTS GUIDE READING ASSY SP	17
303M894090	3M894090	PARTS CLUTCH 50 Z35R SP	16
303M894100	3M894100	PARTS PWB LED ASSY SP	16
303M894110	3M894110	PARTS ROLLER REGISTRATION SP	16
303M894120	3M894120	PARTS ROLLER CONVEYING A SP	16
303M894130	3M894130	PARTS ROLLER CONVEYING B SP	16
303M894140	3M894140	PARTS ROLLER EXIT SP	16
303M894150	3M894150	PARTS ROLLER LOOP SP	16
303M894160	3M894160	PARTS GEAR Z41L Z58L Z76L SP	16
303M894170	3M894170	PARTS GEAR Z32R SP	16
303M894180	3M894180	PARTS GEAR Z38L SP	16
303M894190	3M894190	PARTS GEAR Z33L SP	16
303M894200	3M894200	PARTS GEAR Z34R Z26S SP	16
303M894210	3M894210	PARTS GEAR Z29R SP	16
303M894220	3M894220	PARTS GEAR Z29L ONEWAY SP	16
303M894240	3M894240	PARTS GEAR Z39S SP	16
303M894250	3M894250	PARTS GEAR LF Z29S SP	16
303M894260	3M894260	PARTS SENSOR OPT SP	15,16,17
303MX02021	3MX02021	CUSHION ORIGINAL MAT A	15,18
36211500	36211500	GEAR,LEADING FEED JOINT	16,17
3AK20130	3AK20130	GEAR,WORM MAIN TRAY	15
3HL02240	3HL02240	PUSH SW DP	15

Part.No.	Alternative	Description	Fig.No.
5ESP03090001+01	SP000360	PUSH SWITCH 03 SN /SW-192 N	3
65907210	65907210	GEAR 20,CASSETTE	15
7AAACCAS+10H001	AA063380	AC CORD ASSY AS	2
7NXGP1S173LCH01	NX116910	SENSOR OPT.	2,3,5,6,7,8,
7SC010105+++H01	SC125000	SW.SEESAW	3
7SM010202+++H01	SM044270	SW.MICRO	2
7SP01000001+H01	SP044290	SW.PUSH	2,3

KYOCERA MITA EUROPE B.V.

Bloemlaan 4, 2132 NP Hoofddorp,
The Netherlands
Phone: +31.20.654.0000
Home page: http://www.kyoceramita-europe.com
Email: info@kyoceramita-europe.com

KYOCERA MITA NEDERLAND B.V.
Beechavenue 25, 1119RA Schiphol-Rijk
The Netherlands
Phone: +31.20.58.77.200

KYOCERA MITA (UK) LTD
8 Beacontree Plaza
Gillette Way Reading Berks RG2 0BS,
U.K.
Phone: +44.1189.311.500

KYOCERA MITA ITALIA S.p.A.
Via G. Verdi, 89 / 91, 20063 Cernusco s/N
Milano, Italy
Phone: +39.02.92179.1

S.A. KYOCERA MITA BELGIUM N.V.
Sint-Martinusweg 199-201, 1930 Zaventem,
Belgium
Phone: +32. 2.720.9270

KYOCERA MITA FRANCE S.A.
Espace Technologique de St Aubin
Route de l' Orme
91195 Gif-sur-Yvette CEDEX, France
Phone: +33.1.6985.2600

KYOCERA MITA ESPAÑA S.A.
Edificio Kyocera, Avda de Manacor No. 2,
28290 Las Matas (Madrid),
Spain
Phone: +34. 91.631.8392

KYOCERA MITA FINLAND OY
Atomitie 5C, 00370 Helsinki,
Finland
Phone: +358. 9.4780.5200

KYOCERA MITA (SCHWEIZ)
Hohlstrasse 614, 8048 Zürich
Switzerland
Phone: +41.44.908.4949

KYOCERA MITA DEUTSCHLAND GMBH
Otto-Hahn-Str. 12 D-40670 Meerbusch,
Germany
Phone: +49. 2159.918.0

KYOCERA MITA GMBH AUSTRIA
Eduard-Kittenberger-Gasse 95,
1230 Wien,
Austria
Phone: +43.1.86338

KYOCERA MITA SVENSKA AB
Esbogatan 16B 164 75 Kista,
Sweden
Phone: +46. 8.546.55000

KYOCERA MITA NORGE
Postboks 150 Oppsal, NO 0619 Oslo
Olaf Helsetsvei 6, NO 0694 Oslo,
Norway
Phone: +47. 22.62.73.00

KYOCERA MITA DANMARK A/S
Ejby Industrivej 1, DK-2600 Glostrup,
Denmark
Phone: +45.7022.3880

KYOCERA MITA PORTUGAL LDA.
Rua do Centro Cultural, 41 (Alvalade) 1700-106 Lisboa,
Portugal
Phone: +351. 21.843.6780

KYOCERA MITA SOUTH AFRICA (PTY) LTD.
49 Kyalami Boulevard,
Kyalami Business Park Midrand,
South Africa
Phone: +27.(0)11.540.2600

KYOCERA MITA AMERICA, INC.
Headquarters:
225 Sand Road,
Fairfield, New Jersey 07004-0008,
U.S.A.
Phone: (973) 808-8444

KYOCERA MITA AUSTRALIA PTY. LTD.
Level 3, 6-10 Talavera Road, North Ryde,
N.S.W. 2113 Australia
Phone: (02) 9888-9999

KYOCERA MITA NEW ZEALAND LTD.
1-3 Parkhead Place, Albany
P.O. Box 302 125 NHPC, Auckland,
New Zealand
Phone: (09) 415-4517

KYOCERA MITA Asia Limited
16/F., Mita Centre,
552-566, Castle Peak Road,
Tsuen Wan, New Territories, Hong Kong
Phone: (852)-2610-2181

KYOCERA MITA Corporation
2-28, 1-chome, Tamatsukuri, Chuo-ku
Osaka 540-8585, Japan
Phone: (06) 6764-3555
http://www.kyoceramita.com

©2010 KYOCERA MITA Corporation
KYOCERA is a trademark of Kyocera Corporation

KYOCERA MITA AMERICA, INC.

Headquarters:
225 Sand Road,
Fairfield, New Jersey 07004-0008
TEL : (973) 808-8444
FAX : (973) 882-6000

New York Branch:
30-30 47th Avenue
Long Island City, NY 11101
TEL : (718) 289-2500
FAX : (718) 289-2501

Northeastern Region:
225 Sand Road,
Fairfield, New Jersey 07004-0008
TEL : (973) 808-8444
FAX : (973) 882-4401

Midwestern Region:
201 Hansen Court Suite 119
Wood Dale, Illinois 60191
TEL : (630) 238-9982
FAX : (630) 238-9487

Western Region:
14101 Alton Parkway,
Irvine, California 92618-7006
TEL : (949) 457-9000
FAX : (949) 457-9119

Southeastern Region:
3100 Breckinridge Blvd. NW Building 100,
Suite 105 Duluth, Georgia 30096
TEL : (770) 729-9786
FAX : (770) 729-9873

Southwestern Region:
2825 West Story Road,
Irving, Texas 75038-5299
TEL : (972) 550-8987
FAX : (972) 570-4704

©2010 KYOCERA MITA Corporation
KYOCERA is a trademark of Kyocera Corporation

National Operation Center
& National Training Center:
2825 West Story Road,
Irving, Texas 75038-5299
TEL : (972) 659-0055
FAX : (972) 570-5816

Latin America Division:
8240 N.W. 52nd. Terrace Dawson Building,
Suite 108 Miami, Florida 33166
TEL : (305) 421-6640
FAX : (305) 421-6666

KYOCERA MITA CANADA, LTD.

6120 Kestrel Road, Mississauga,
Ontario L5T 1S8, Canada
TEL : (905) 670-4425
FAX : (905) 670-8116

KYOCERA MITA MEXICO, S.A. DE C.V.

Av. 16 de Septiembre #407
Col. Santa Inés,
Azcapotzalco México,
D.F. 02130, México
TEL : (55) 5383-2741
FAX : (55) 5383-7804

KYOCERA MITA Brazil Ltda.

Av. Tambore, 1180 Mob.B-09 CEP 06460-000
Tambore-Barveri-SP,
Brazil
TEL : (55) 11-4195-8496
FAX : (55) 11-4195-6167

KYOCERA MITA Asia Limited

16/F., Mita Centre,
552-566, Castle Peak Road,
Tsuen Wan, New Territories, Hong Kong
Phone: (852)-2610-2181

KYOCERA MITA (Thailand) Corp., Ltd.
335 Ratchadapisek Road, Bangsue,
Bangkok, 10800, Thailand
Phone: (66)-2-586-0333

KYOCERA MITA Singapore Pte Ltd.
121 Genting Lane, 3rd Level,
Singapore 349572
Phone: (65)-6741-8733

KYOCERA MITA Hong Kong Limited
16/F., Mita Centre,
552-566, Castle Peak Road,
Tsuen Wan, New Territories,
Hong Kong
Phone: (852)-2429-7422

KYOCERA MITA Taiwan Corporation
6F., No.37, Sec. 3, Minquan E. Rd.,
Zhongshan Dist., Taipei 104, Taiwan R.O.C.
Phone: (886)-2-2507-6709

KYOCERA MITA Korea Co., Ltd.
18F, Kangnam bldg, 1321-1,
Seocho-Dong, Seocho-Gu, Seoul, Korea
Phone: (822)-6933-4050

KYOCERA MITA India Private Limited
First Floor, ORCHID CENTRE
Sector-53, Golf Course Road, Gurgaon 122
002, India
Phone: (91)-0124-4671000